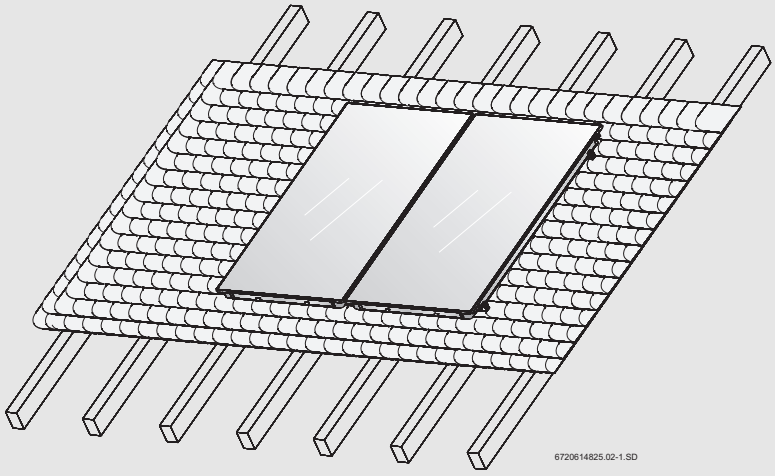

Solar Thermal Flat Plate Collectors FKT-1

Mounting System for Sloped Roofs

BOSCH

Installation Manual for Contractors

6 720 642 565 (2009/12) US/CA

1 General . . . 3

2 Specifications . . . 4

3 Safety . . . 5

3.1 Intended use . . . 5
3.2 Guideline of Notices . . . 6
3.3 Please observe these safety instructions . . . 6

4 Before installation . . . 7

4.1 General notes . . . 7
4.2 Component description . . . 8
4.3 Other equipment . . . 10
4.4 Transport and storage . . . 10
4.5 Technical documentation . . . 11
4.6 Determining space required on roof . . . 12

5 Installing roof hooks and horizontal rails . . . 13

5.1 Rail and hook spacing . . . 14
5.2 Adjustable Roof Hooks for Tile Roofs . . . 15
5.3 Adjustable Roof Hooks on Flat Shingle and Slate Roofs . . . 17
5.4 Hanger Bolt Installation . . . 19
5.5 Roof Hooks for Flat Shingles . . . 22
5.6 Sheet Metal Roof Surfaces . . . 23
5.7 Installing high load rails (accessory) . . . 24
5.8 Installing horizontal rails . . . 25

6 Collector Installation . . . 27

6.1 Preparing to install the collectors . . . 28
6.2 Mounting the collectors . . . 29

7 Collector sensor . . . 33

8 Hydraulic connections . . . 34

8.1 Installing an air vent (accessory) . . . 35

9 Connecting Two Collector Arrays (accessory) . . . 38

10 Final activities . . . 39

10.1 Checking the installation . . . 39
10.2 Insulating the Pipes above the Roof . . . 40

11 Quick reference guide for tile roof and pressure filling . . . 41

12 Spare parts . . . 42

13 Certification . . . 54

1 General

This chapter details which technical rules and regulations apply to this installation.

NOTICE

Observe all standards and guidelines applicable to the installation and operation of this system in your country. Installations must be made in accordance with all codes and regulations applicable to the installation site.

Lightning protection

If the solar equipment protrudes above the roof ridge or the building height (installation height) exceeds 66 ft (20 m), it is recommended to have lightning arrestors installed on the tallest equipment including the solar collectors.

2 Specifications

FKT-1		
Certificates		
Length		81-1/2 in (2,070 mm)
Width		45-1/8 in (1,145 mm)
Depth		3-1/2 in (90 mm)
Clearance between collectors		1 in (25 mm)
Absorber contents, Portrait version	V_f	0.38 gal (1.43 L)
Absorber contents, Landscape version	V_f	0.46 gal (1.76 l)
Gross absorber surface area	A_G	25.5 ft² (2.37 m²)
Net absorber surface area		24.0 ft² (2.23 m²)
Net weight, Portrait version	m	97 lbs (44 kg)
Net weight, Landscape version	m	99 lbs (45 kg)
Permissible operating pressure of the collector	p_{max}	145 psi (10 bar)

Tab. 1 Specifications

3 Safety

This chapter explains the meaning of the notes you will find in this manual and provides general safety instructions for safe and trouble-free operation.

You will find the installation-specific safety and user notes next to the appropriate installation steps.

Carefully read the safety instructions before commencing the installation.

Severe injury and even death, as well as property damage and environmental damage, may follow if you ignore safety instructions.

About this manual

This installation manual contains important information for the safe and intended installation of sloped roof mounted systems as well as plumbing connections.

The illustrations in this manual show the portrait collectors. Instructions for landscape collectors are the same as for portrait unless stated otherwise.

These technical documents should be retained in a safe place.

The activities described in the installation manual assume expertise based on completed vocational training in plumbing. Only carry out these installation steps if you possess these skills.

- Hand these installation instructions to the building owner.
- Explain to the customer the function and operation of the related devices.

3.1 Intended use

Install components only on roofs with sufficient strength and capacity. Take the additional roof load per roof rack, including solar collector, into consideration.
If necessary, ask a structural engineer for assistance.

This mounting system holds the solar thermal collectors (portrait and landscape) on pitched roofs with a slope of 25° to 65°. The collectors can be installed on different roof surfaces, including asphalt shingle, ceramic tile, slate, composite shingle, corrugated or standing seam or other metal roofs with slopes between 5° and 65°.

Application conditions

The mounting system is suitable for a max. standard snow load of 42 lbs/sqft (2.0 kN/m^2) and an installation height of max. 66 ft (20 m). Using appropriate accessories, the system can be used for a max. standard snow load of 65 lbs/sqft (3.1 kN/m^2) and a max. installation height of 328 ft (100 m). See Chapter 5.7 "Installing high load rails (accessory)".

Do not attach any other devices, e.g. antennas, to collector racks.

3.2 Guideline of Notices

Two levels of safety are identified by the following symbols:



DANGER

Denotes a possible severely dangerous situation where, without proper caution, bodily injury or loss of life may result.



RISK OF INJURY/SYSTEM DAMAGE/ BUILDING DAMAGE

Identifies a possible dangerous situation that can lead to mild to moderate bodily injury or property damage.

Additional symbol for designating user notes:

NOTICE

Application comment for optimum use of equipment and adjustment as well as useful information.

3.3 Please observe these safety instructions



RISK TO LIFE

from a fall or falling tools and parts.

- Take appropriate action to prevent accidents when working on roofs.
- While working on the roof, take all necessary precautions against a possible fall.
- Always wear protective clothing and use your personal protective equipment (PPE).
- If you are not comfortable working on a ladder, a lift, or the roof, hire a roofing contractor to install the equipment.
- After completing an installation always verify that all components are installed according to the instructions and are securely attached.



RISK OF INJURY

Personal injury and system faults can result from altered construction.

- Never modify structural elements.
- Never drill additional holes.
- Never attach non-system related components (e.g. antennas).



RISK OF INJURY

Solar system components can become very hot even when a system is decommissioned.

- Always wear protective clothing and safety equipment.
- Cover the collector (collector covers are available as an accessory) during installation to prevent high temperatures resulting from solar radiation.



Observe maximum load and distance from edges before installing the substructure supports to the roof. If necessary, consult a structural engineer to determine if the structure is suitable for installing solar collectors, including expected snow and wind loads.



Solar pipes and solar fluid can cause severe burns. Extreme caution must be taken when a system is in stagnation.



SYSTEM DAMAGE

Avoid scratching or sudden shocks to the glass of a solar panel. Never step or walk on collectors.



Never braze or solder in close proximity of a solar panel.



Install a heat exchanger to separate pool water or potable water from the collector system.



The use of heat transfer fluid “Tyfocor L, Tyfocor LS and Tyfocor L "G" ” is strongly recommended.
For more detailed information about suitable solar heat transfer fluids refer to the installation instruction of the KS pump stations.



This system is not suitable for drain back installations. Only closed loop pressurized systems are permitted.

4 Before installation

4.1 General notes

NOTICE

It is recommended to consult a roofing company, as they are experienced in working on roofs and are equipped with the necessary personal safety equipment.

Roofers also are experienced with attaching equipment to the roof and making proper penetrations.

Make yourself familiar with the on-site conditions and local regulations before commencing the installation.

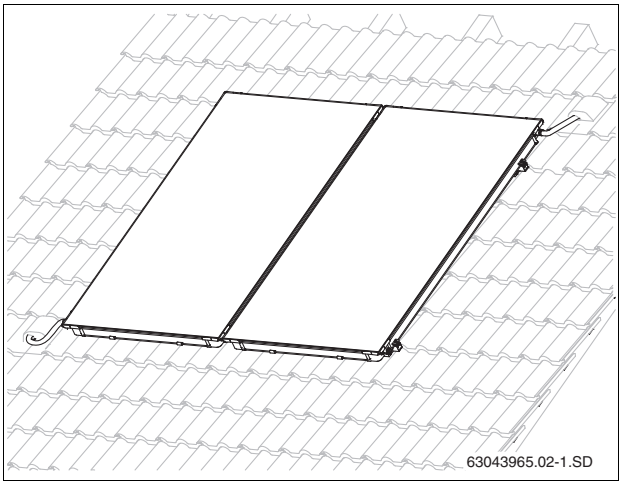

Fig. 1 General overview of two collectors

Check

- the delivery for completeness and perfect condition.
- the roof structure for sufficient strength and possible damage (e.g. leaks).
- the building height and determine the type and number of attachment points required
- the optimal arrangement of the solar collectors. Take into consideration the orientation of the building toward the sun, any tall trees, adjacent buildings, building features, etc.
- where the penetration(s) into the building envelope are located and arrange the collector array accordingly.
- if the collector array can be arranged symmetrically with the building and building features.

NOTICE

Only use OEM components and replace any defective or damaged parts immediately.

NOTICE

It is recommended to consult a professional roofer if roof repairs are necessary. Have the work completed before installing the solar equipment.

4.2 Component description

4.2.1 Collector racks

The collectors are attached to horizontal rails that are mounted on roof hooks or standoffs. A variety of attachment methods are available to match different roof types and surfaces.

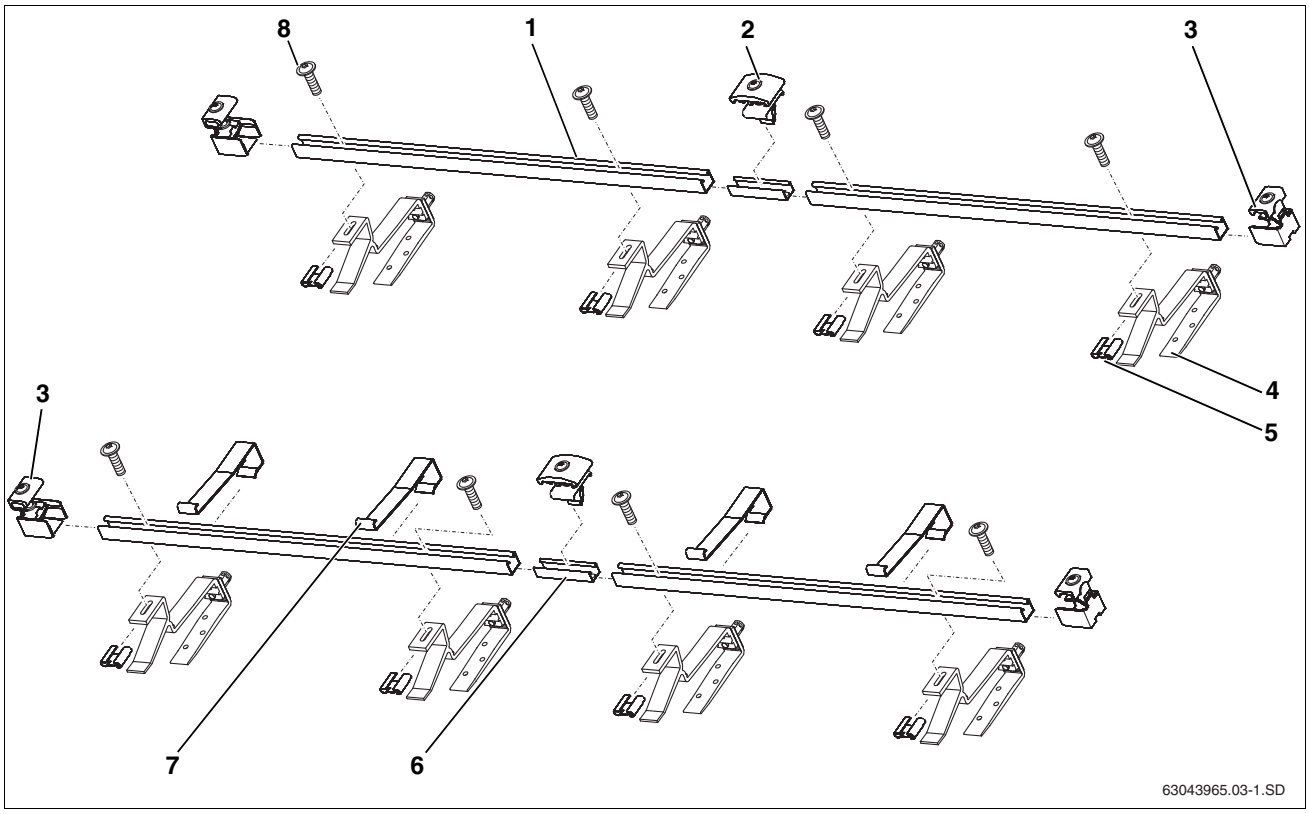

Fig. 2 Mounting system for 2 collectors – 1 basic system, 1 extension system and 2 sets of roof hooks (hooks for tile roofs shown)

Basic mounting system for each collector array including the first collector (Fig. 2):

1	Horizontal rail	2 ×
3	Single-sided collector clamp	4 ×
7	Collector hanger	2 ×
8	M8 nut	4 ×

Extension mounting system for each additional collector (Fig. 2):

1	Horizontal rail	2 ×
2	Double-sided collector clamp	2 ×
7	Collector hanger	2 ×
6	Rail connector	2 ×
8	M8 nut	4 ×

Roof hook for tile roofs, per collector (Fig. 2):

4	Roof hook for tile roofs, adjustable	4 ×
5	Sliding nut	4 ×

NOTICE

For higher snow and wind loads, additional horizontal rails and roof hooks may be needed.

4.2.2 Hydraulic connection

For the hydraulic connections the connection kit is needed. The parts are included in two of the corner protectors of each collector's packaging.

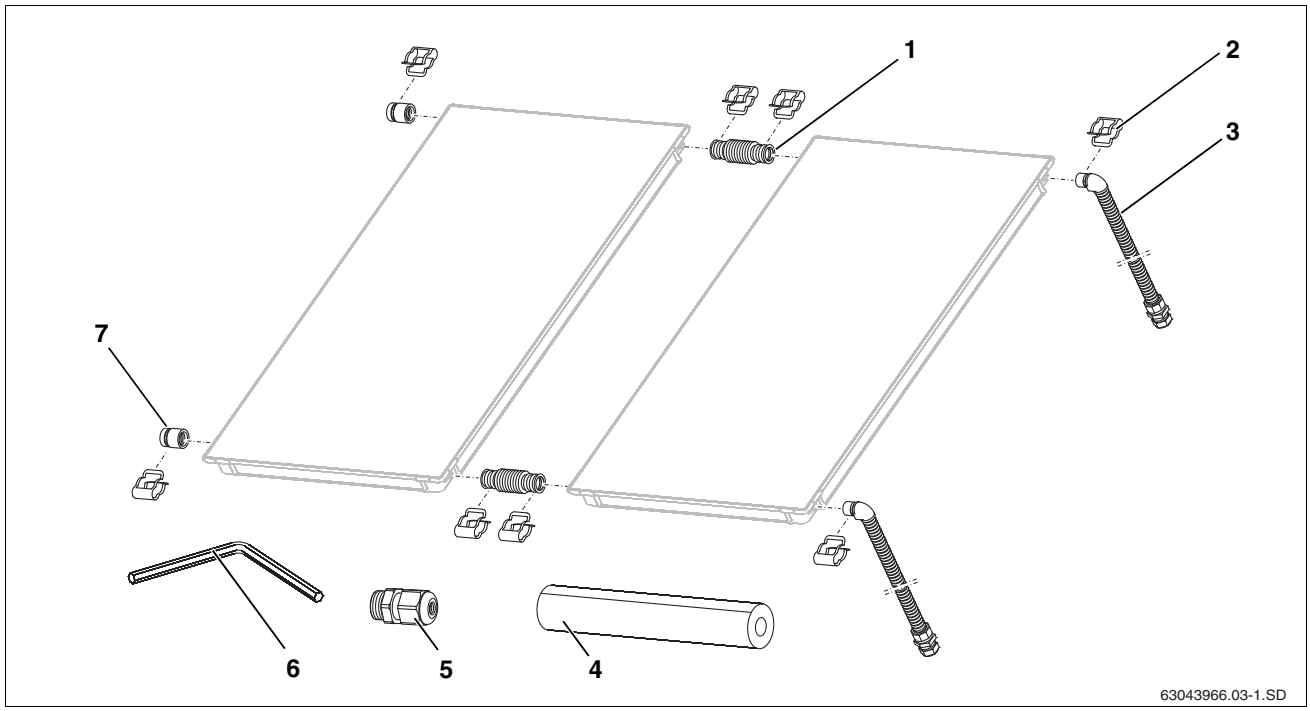

Fig. 3 Connection kit and connection set

Connection kit, per collector array (Fig. 3)

1	Flexible connector	2 ×
2	Safety clip	4 ×
3	Flexible pipe	2 ×
4	Closed cell insulation	1 ×
5	Collector sensor strain relief	1 ×
6	#5 Allen wrench	1 ×
7	Dummy plug	2 ×

Connection set between the collectors, for each collector (in two of each collector's protective corners, Fig. 4)

1	Flexible connector	2 ×
2	Safety clip	4 ×

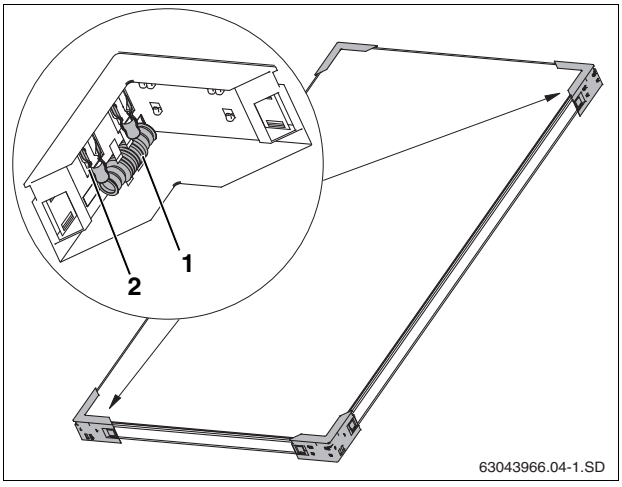

Fig. 4 Two of the four protective corners of each collector carry parts for interconnecting collectors

4.3 Other equipment

- Level
- Rope
- High head filling pump
- Personal protective equipment for on the roof
- Pipe insulation with UV protective coating
- Scaffolding
- Ladder
- Bucket truck or scissor lift

NOTICE

When installing the roof mounting set and water connection, the only tool you will need is the size 5 Allen wrench from the connection kit plus some adjustable pipe wrenches.

4.4 Transport and storage

All components are protected by transport packaging.

NOTICE

Dispose of the transport packaging in an environmentally friendly manner.

Transport protection for collector connections

The collector connections are protected against damage by rubber caps.

CAUTION!

SYSTEM DAMAGE

from damaged gaskets.

- ▶ Do not remove the rubber caps (Fig. 5, [1]) until immediately prior to installation.

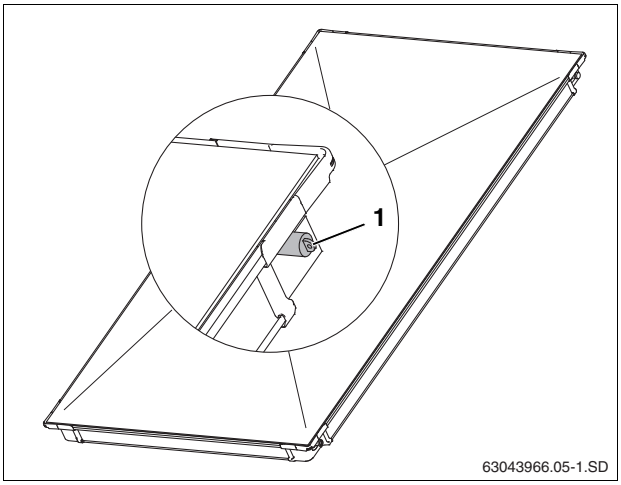

Fig. 5 Rubber caps on collector connections

Storage

The collectors must be stored in dry conditions.

NOTICE

Do not store collectors outside without protection from the weather. The packaging is not designed to be all weather proof.

Protect the collectors using a tarp during transport in wet weather in an open truck.

4.5 Technical documentation

The solar thermal system consists of various components (Fig. 6). Installation, operation and maintenance documentation is provided for each component. Accessories may be accompanied by a separate document.

1 Collector: instructions for roof installation are enclosed with the connection kit

2 Pump station: instructions enclosed with the pump station

3 DHW storage tank: instructions enclosed with the DHW storage tank

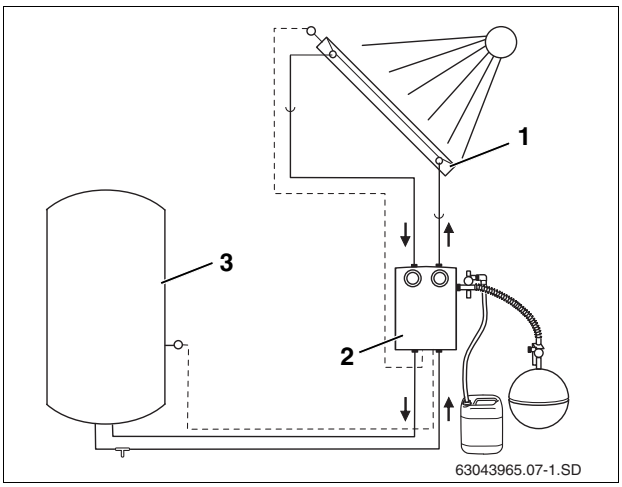

Fig. 6 Solar thermal system components and technical documentation

4.6 Determining space required on roof

Please observe the following minimum space requirements for roof stability reasons, safe access during installation, and to reduce wind load.

Dimension A and B
Area required for the collector array.

Dimension C
On tile roofs keep a minimum clearance of two rows of tiles to the ridge, dormers, a chimney, or other building features. On asphalt shingle roofs, metal roofs, or similar, keep at least 3 feet (1m) clearance to the ridge, to dormers, a chimney, or other building features.

Dimension D
Keep clear of roof overhangs on the gable end of the house.

Dimension E
Minimum 12 in (30 cm) for making the connection in the attic.

Dimension F
Minimum 16 in (40 cm) for making the connection in the attic.

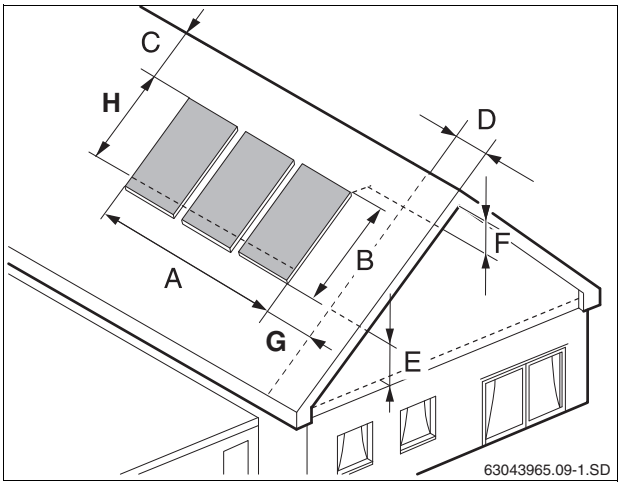

Fig. 7 Clearances to be observed

NOTICE
If access to the roof is limited, consider installing the air vent in the attic. Ensure that there is sufficient room and clearance in the attic to position this air vent above the top of the collectors.

Dimension G
Keep at least 3 feet (1 m) clearance from roof edges and overhangs including the gable wall thickness.

Dimension H
Dimension H is 75 in (1,900 mm) for portrait collectors (39.4 in (1,000 mm) for landscape collectors) and is the minimum distance from the upper edge of the collector to the lower profile rail, which is installed first.

Space requirements for portrait collectors:

Number of collectors	Dimension A	Dimension B
2	91 in (2.32 m)	81 1/2 in (2.07 m)
3	137 in (3.49 m)	81 1/2 in (2.07 m)
4	183 in (4.66 m)	81 1/2 in (2.07 m)
5	230 in (5.83 m)	81 1/2 in (2.07 m)
6	278 in (7.06 m)	81 1/2 in (2.07 m)
7	322 in (8.17 m)	81 1/2 in (2.07 m)
8	368 in (9.34 m)	81 1/2 in (2.07 m)
9	414 in (10.51 m)	81 1/2 in (2.07 m)
10	460 in (11.68 m)	81 1/2 in (2.07 m)

Tab. 2 Space requirement for portrait collectors

Space requirements for landscape collectors:

Number of collectors	Dimension A	Dimension B
2	164 in (4.17 m)	45 5/16 in (1.15 m)
3	266 in (6.26 m)	45 5/16 in (1.15 m)
4	329 in (8.36 m)	45 5/16 in (1.15 m)
5	411 in (10.45 m)	45 5/16 in (1.15 m)
6	494 in (12.55 m)	45 5/16 in (1.15 m)
7	577 in (14.64 m)	45 5/16 in (1.15 m)
8	659 in (16.74 m)	45 5/16 in (1.15 m)
9	733 in (18.61 m)	45 5/16 in (1.15 m)
10	824 in (20.93 m)	45 5/16 in (1.15 m)

Tab. 3 Space requirement for landscape collectors

5 Installing roof hooks and horizontal rails

WARNING!

RISK TO LIFE

Use appropriate personal protective equipment whenever on a ladder, lift, or the roof.

WARNING!

RISK OF INJURY

from a fall or falling parts.

- Take appropriate action to prevent accidents when working on roofs.
- Always wear your personal protective clothing and safety equipment.

Four types of roof attachments are offered:

- Adjustable roof hook (→ 5.2, 5.3):
  for installation on "S"-tile roofs, barrel tile roofs, and similar roof tiles;
- Hanger bolt (→ 5.4):
  for corrugated sheet roofs, asphalt shingle roofs, flat shingle roofs, slate roofs, mission style pan roofs, and similar roofing materials;
- Roof hooks (→ 5.5):
  for asphalt shingle, slate, or composite shingle roofs, and similar roofing materials;
- For metal roofs the hanger bolt (→ 5.6) can be used or in case of a sufficiently strong standing seam, a special seam clamp is recommended. Please contact Buderus for details.

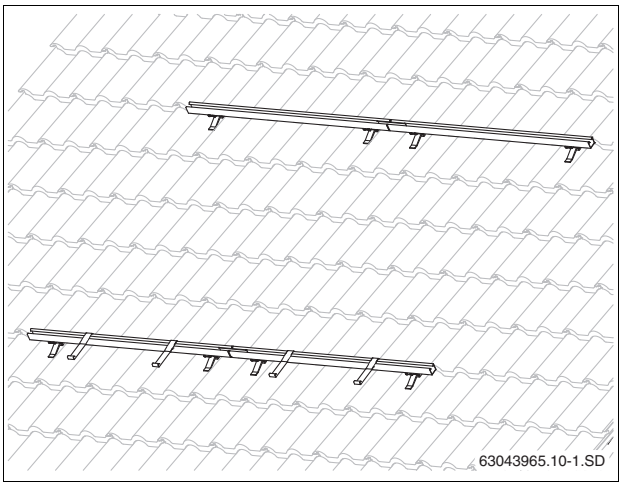

Fig. 8 Installed horizontal rails for two collectors

WARNING!

PROPERTY DAMAGE

Ensure the building substructure is capable of carrying the load of the panels including the required snow and wind loads. Only attach to framing that is properly supported.

Do not connect to less than 2x6 framing. Follow the local building code and use best practice methods.

NOTICE

Observe all national and local safety regulations, as well as the safety instructions in this manual when working on roofs.

NOTICE

Always use personal protective equipment, and ensure it is in good working order.

NOTICE

Take measures to protect the roof membrane when working on the roof. It is recommended to consult a professional roofer to ensure the membrane is not damaged.

5.1 Rail and hook spacing

Use the dimensions given as guidelines for a proper installation.

NOTICE

On tile roofs the tile valleys determine the true distance between the roof hooks.

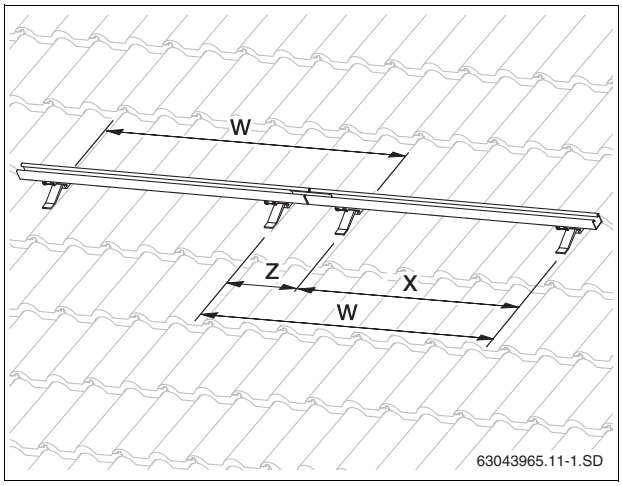

Fig. 9 Distance between roof hooks

Distances between roof attachments

Every horizontal rail is fastened using two roof attachments (Fig. 9) per collector. See the table for the approximate distance between the attachment points.

Installation type	Distance w	Distance x	Distance z
portrait	approx. 46 in (1170 mm)	24 – 51 in (610 – 1030 mm)	6-5/8 – 25-1/4 in (170 – 540 mm)
landscape	approx. 82-5/16 in (2090 mm)	60 – 77 in (1520 – 1950 mm)	6-5/8 – 21-1/4 in (170 – 540 mm)

Tab. 4 Distance between attachment points

NOTICE

Distances x and z should always be approximately equal to distance w.

Distances between horizontal rails

Set the distance between the top and bottom profile rails (Fig. 10) according to Tab. 5.

Collector type	Distance y	
	from	to
portrait	52 in (1320 mm)	67 5/16 in (1710 mm)
landscape	23 5/8 in (600 mm)	32 5/16 in (820 mm)

Tab. 5 Distance (center to center) between bottom and top rail

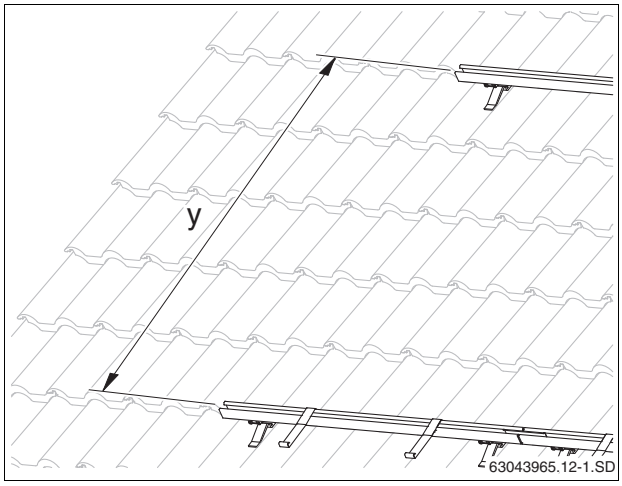

Fig. 10 Distance between profile rails

5.2 Adjustable Roof Hooks for Tile Roofs

Step one is to install all roof hooks according to the guidelines shown in tables 4 and 5 on page 14.

NOTICE

Avoid modifying the roof surface and take care not to compromise a roofing membrane. Consult a professional roofer to ensure proper installation.

NOTICE

In the case of tiles laid in mortar, leave clearances of at least 2 rows of tiles from any ridge or building feature.

NOTICE

If roof hooks cause tiles to ride too high or not fit properly, the conflicting areas of the tiles may have to be ground down to ensure a secure fit.

CAUTION!

SYSTEM DAMAGE

from gradual loosening of the hex-nut on the roof hook. When the nut is tightened, adhesive is activated which bonds the joint securely after one hour.

- If the roof hook requires adjustment after this time the adhesive may be compromised. It must then be secured on-site (e.g. lock washer).

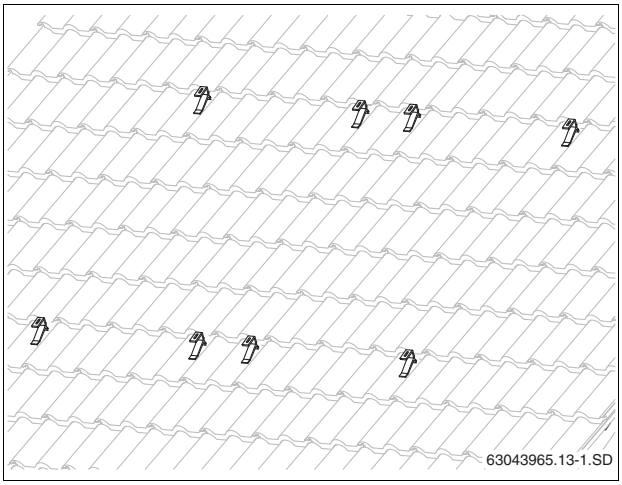

Fig. 11 Installed roof hooks for two collectors

5.2.1 Attaching roof hooks to the substructure

NOTICE

Roof hooks must be attached to the building substructure. Sheathing alone will not support the load of the solar collectors. Minimum 2x6 framing required to attach the roof hooks to. Follow the local building code and use best practice methods.

NOTICE

With some roof coverings it may be necessary to suspend the roof hook using a board or shims (Fig. 13, [6]) to get the upper part of the roof hook to rest on top of the tile.

- Loosen the long hex-nut (Fig. 12, [2]) and disassemble the unit.
- Insert bolt into upper hole (Fig. 12, [3]).
- Reassemble with the L-shaped piece (Fig. 12, [4]) facing away and down.
- Do not tighten the nut (Fig. 12, [2]) until the hook is installed and properly adjusted.

CAUTION!

SYSTEM DAMAGE

from failure of the roof hook if the bolt is not positioned in the upper hole, resulting in uneven load distribution.

- The roof hooks must be positioned in tile valleys and directly bolted to the building substructure with sufficient capacity to carry the load of the solar system including required snow and wind loads (Fig. 13, [3]).

Allow for expansion and contraction by keeping some clearance along the upper edge of the tile (Fig. 13, [4]).

- Push the L-shaped part of the roof hook down until it lies flat on the sheathing or on the board/shim if needed (Fig. 13, [6]).

NOTICE

The toothed washer (Fig. 13, [5]) must grip the teeth on the lower part of the roof hook.

- Tighten the long hex-nut (Fig. 13, [1]). To do this, insert the size 5 Allen wrench into the hole in the hex-nut and turn.
- Using suitable screws (Fig. 13, [2]), secure the L-shaped part of the roof hook to the building substructure. The sheathing alone will not offer sufficient support.

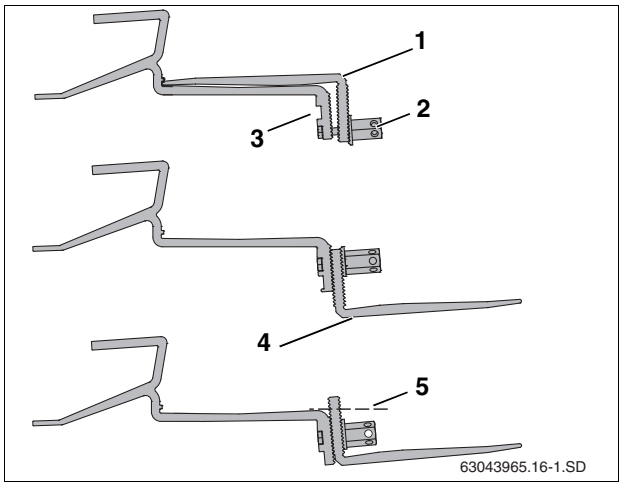

Fig. 12 Adjusting the roof hook

1 Lower part of roof hook
2 Long hex-nut
3 Upper hole for fastening the lower part
4 L-shaped attachment piece
5 Cut off if necessary

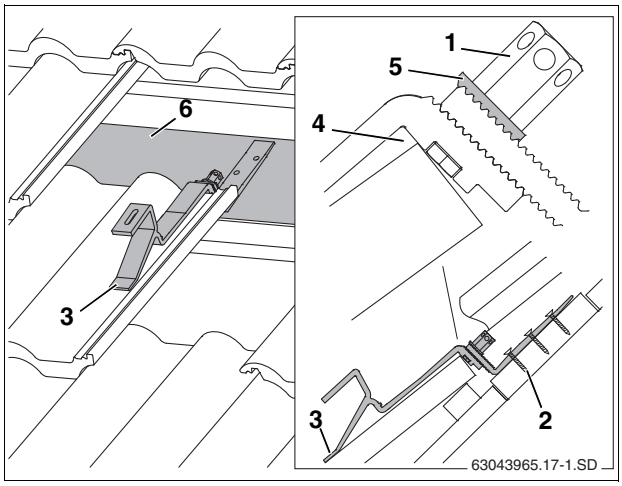

Fig. 13 Roof hook installed (some tiles have been removed for a better view)

1 Long hex-nut
2 Screw for fastening roof hook
3 Front brace
4 Adjust the tile as necessary to install the roof hook
5 Toothed washer
6 Sheathing, or board/shim if needed

5.3 Adjustable Roof Hooks on Flat Shingle and Slate Roofs

NOTICE

It is recommended to consult a roofer when installing on shingle or slate roofs.

Ensure the required distances (w, x and y) between the roof hooks as detailed in (Tab. 4 and Tab. 5, page 14). Remove the needed number of shingles/tiles to gain access to the sheathing where to mount the roof hook (Fig. 14, [1]).

The roof hooks must be directly bolted to the building substructure with sufficient capacity to carry the load of the solar system including required snow and wind loads.

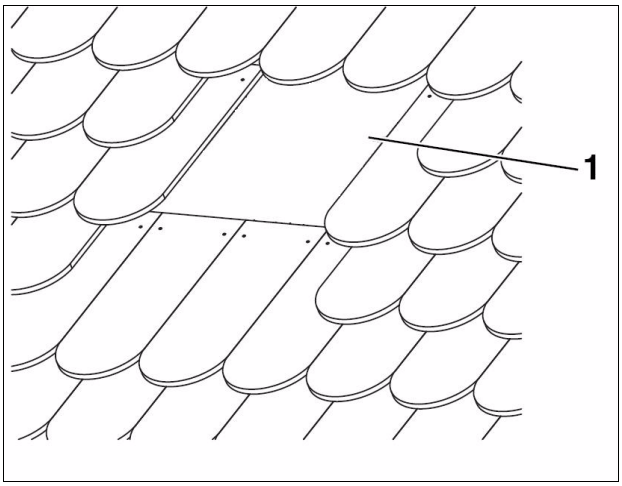

Fig. 14 Remove the needed number of shingles/tiles

Preparing roof hook

Before installing, the lower part must be moved to the correct position.

- Loosen the long hex-nut (Fig. 15, [2]) and disassemble the unit.
- Insert bolt into upper hole (Fig. 15, [3]).
- Reassemble with the L-shaped piece (Fig. 15**, center**) facing away and down.
- Do not tighten the nut (Fig. 15, [2]) until the hook is installed and properly adjusted.

CAUTION!

SYSTEM DAMAGE

from failure of the roof hook if the bolt is not positioned in the upper hole, resulting in uneven load distribution.

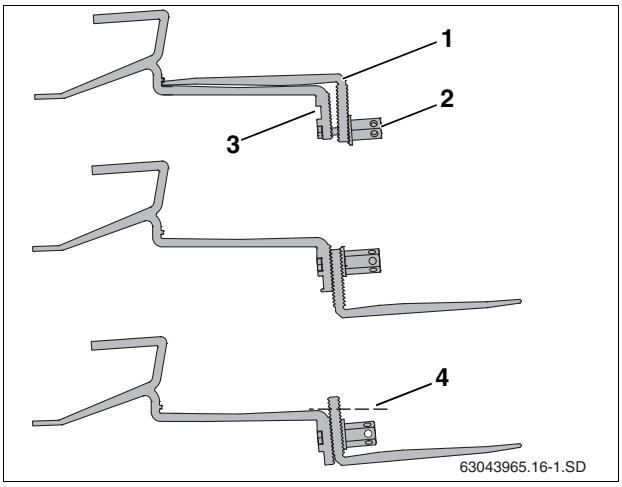

Fig. 15 Repositioning lower part of roof hook

1 L-shaped attachment piece
2 Long hex-nut
3 Upper hole
4 Cut off if necessary

Installing the roof hook

- Push the lower part of the hook down until it lies flat on the sheathing (Fig. 16, [1]).

NOTICE

The toothed washer (Fig. 16, [2]) must engage with the teeth on the lower part of the roof hook.

- Tighten the long hex-nut (Fig. 17, [1]). To do this, insert the size 5 Allen wrench into the hole in the hex- nut and turn.
- Using suitable screws, attach the upper part of the roof hook (Fig. 18) through the sheathing to the building substructure.

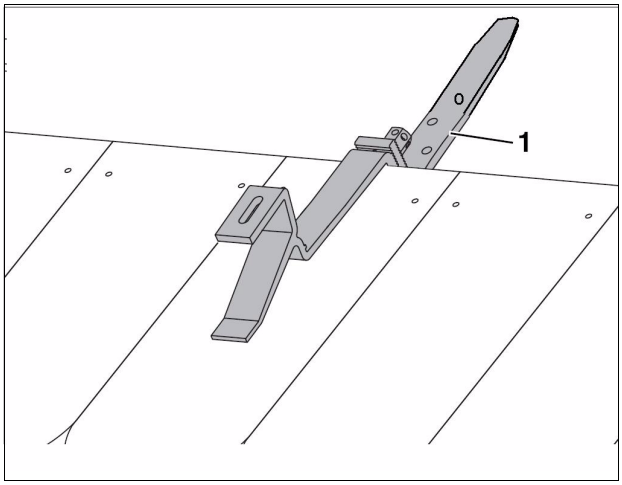

Fig. 16 Installed roof hook

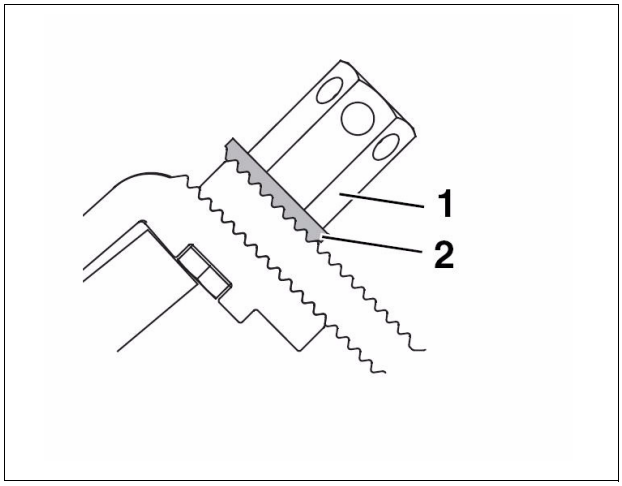

Fig. 17 Toothed washer must engage with the toothed hook when tightening the nut

1 Long hex-nut

2 Toothed washer

- If necessary cut adjacent shingles/tiles (Fig. 18, [1]) to size (dashed line, Fig. 18, [2]).

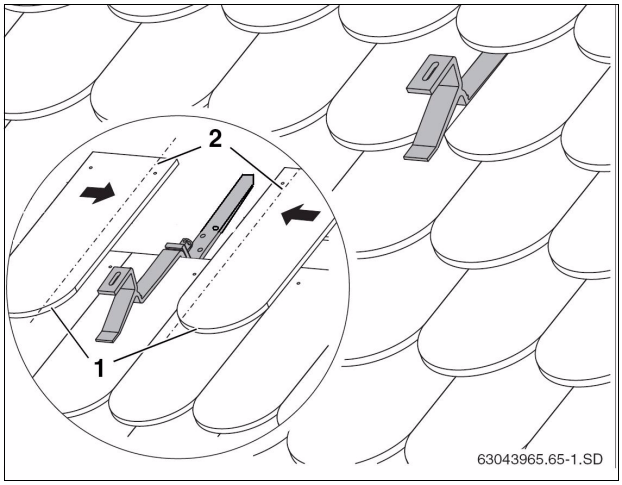

Fig. 18 Tiles/shingles may have to be trimmed to size

5.4 Hanger Bolt Installation

It is recommended to consult a roofer when installing on corrugated roofs.

WARNING!

RISK TO LIFE

from inhalation of fibers containing asbestos.

- Work with materials containing asbestos must only be carried out by trained and certified professionals.

Hanger bolts are designed for asphalt shingle roofs, flat shingle roofs, slate roofs, corrugated sheet roofs, mission style pan roofs, and similar roofing materials. The following procedure describes installation on a corrugated roof. Installation on flat roof surfaces should be performed in a similar fashion.

Standard delivery (Fig. 19):

1	M8 screw	4 ×
2	Attachment block	4 ×
3	M12 nut	4 ×
4	Washer	4 ×
5	Gasket	4 ×
6	M12 stud	4 ×

The number of hanger bolts per panel must be based on the required snow and wind load. Minimum four (4) bolts per panel.

On corrugated roofs, the peaks in the corrugation determine the true distance between the post screws. Maintain the required distances (w, x and y) between hanger bolts as shown in Tab. 4 and Tab. 5, page 14.

CAUTION!

SYSTEM DAMAGE

due to an insufficient substructure.

- Ensure the building substructure is capable of carrying the load of the panels including the required snow and wind loads.
- Only attach to framing that is properly supported.
- Do not install hanger bolts in less than 2x6 framing.
- Follow the local building code and best practice when installing hanger bolts.

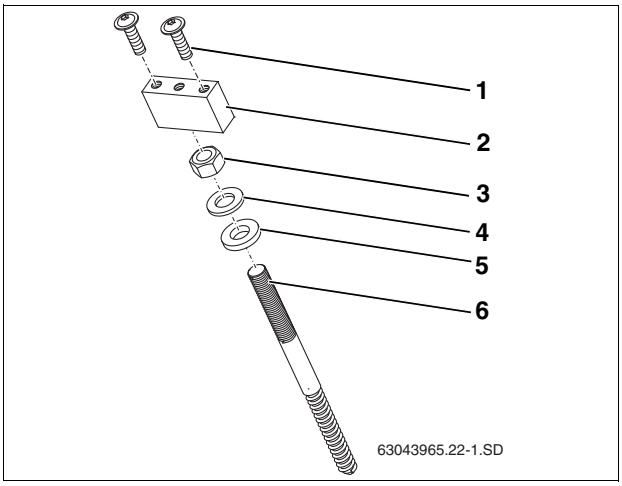

Fig. 19 Hanger bolt

Additional tools required

- Cordless screwdriver
- Tape measure
- Wood drill bit 1/4" (6 mm)
- Metal drill bit, 1/2" (13 mm)
- Wrench size 15 and 19

Installing the hanger bolts

NOTICE

With corrugated roofs it is recommended to install the hanger bolts at the peak of the corrugation to reduce the pressure on the gasket from rain water.

- Determine the length of the drill bit for the wood drill as follows:

	3-1/2 in (90 mm)
Height of peak of corrugation	+
Thickness of roofing material	+
Required depth of hole to be drilled	=

BUILDING DAMAGE

caused by leaks.

CAUTION!

- Determine the hole locations for the hanger bolts (see Tab. 4 and Tab. 5).
- Drill a 1/2" (13 mm) hole through the roofing surface. Do not drill into the wood!
- Use the 1/4" (6 mm) bit and drill a hole of the depth determined above.
- Clean off shavings.
- Use a caulking gun and fill the hole with appropriate sealant.
- When installing the hanger bolt, note the sequence of the individual parts (Fig. 20).
- Install the stud (Fig. 20, [5]) as far as it will go into the attachment block (Fig. 20, [1]).
- Screw the preassembled hanger bolt into the roof using a size 15 wrench according to the measured depth of the hole.
- Tighten the attachment block and turn horizontally.
- Use a level to ensure all attachment blocks are at the same height. Use a cord across all blocks to confirm.

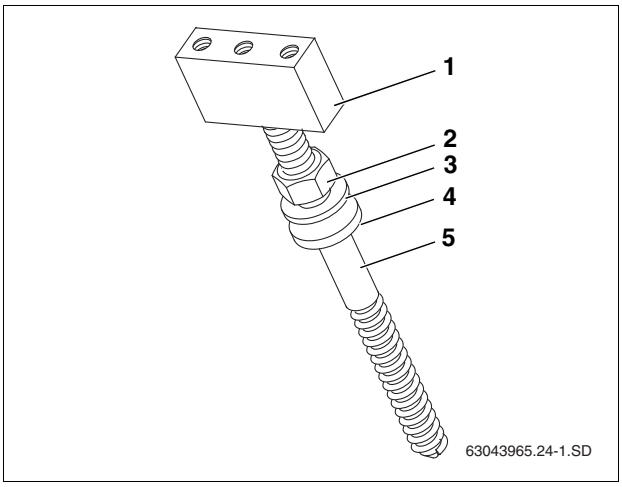

Fig. 20 Installing the hanger bolt – sequence

1 Attachment block
2 M12 nut
3 Washer
4 Gasket
5 M12 stud

- Tighten the nut (Fig. 21, [2]) so the gasket (Fig. 21, [3]) is pressed against the roof surface making a seal.

NOTICE

- Verify that the attachment block (Fig. 21, [1]) is screwed on tight and oriented horizontally.

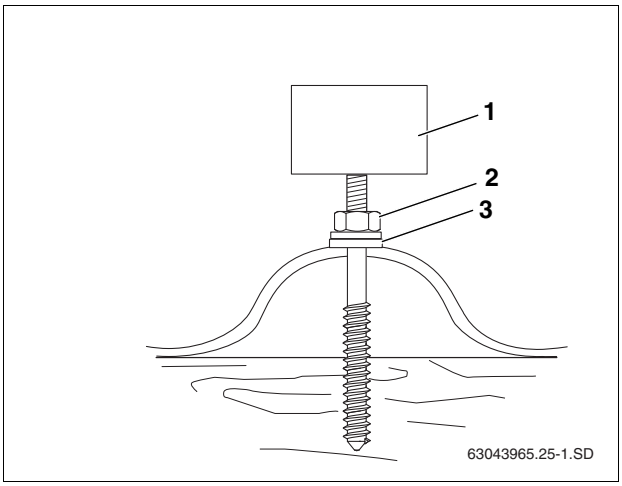

Fig. 21 Post screw installed to corrugated roof

1 Attachment block
2 Nut, M12
3 Gaskets

Installing the horizontal rail

Please also note Chapter 5.8.1 "Connecting the horizontal rails".

- Fasten each rail (Fig. 22, [2]) with two screws (Fig. 22, [1]).

NOTICE

The horizontal rails must not sag due to differences in height of the roof or the hanger bolts.

- Use a cord to verify the horizontal rails do not sag. To correct differences screw in the high hanger bolt until level.

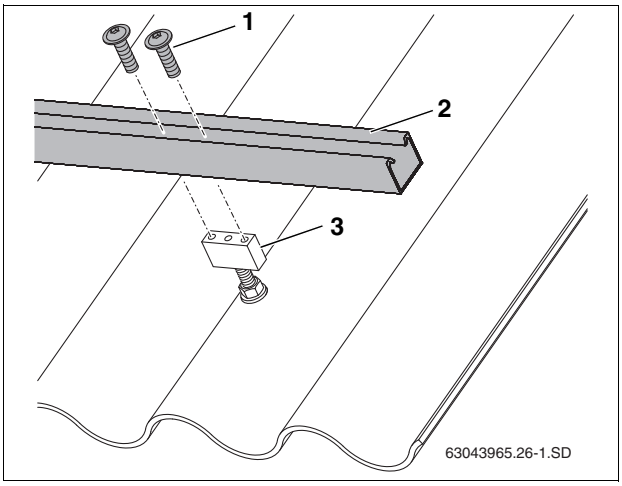

Fig. 22 Attaching the horizontal rail to the attachment blocks on the hanger bolts.

1 Screw
2 Horizontal rail
3 Attachment block

5.5 Roof Hooks for Flat Shingles

NOTICE

It is recommended to consult a roofer when installing on slate or composite shingle roofs.

Fig. 23 shows a typical installation of the roof hook on an asphalt shingle, flat shingle, or slate roof. The long part of the hook faces upward and is covered by the adjacent rows of shingles.

Ensure the required distances (w, x and y) between the two roof hooks as detailed in (Tab. 4 and Tab. 5, page 14).

- Install roof hook (Fig. 23, [3]) and gasket (Fig. 23, [2], not supplied) to the shingles using screw (Fig. 23, [1]).
- It is recommended to apply generous amounts of caulking on the underside of the roof hook and into the screw holes to establish a tight seal.

CAUTION!

SYSTEM DAMAGE

due to an insufficient substructure.

- Ensure the building substructure is capable of carrying the load of the panels including the required snow and wind loads.
- Only attach to framing that is properly supported.
- Do not install hanger bolts in less than 2x6 framing.
- Follow the local building code and best practice when installing roof hooks.

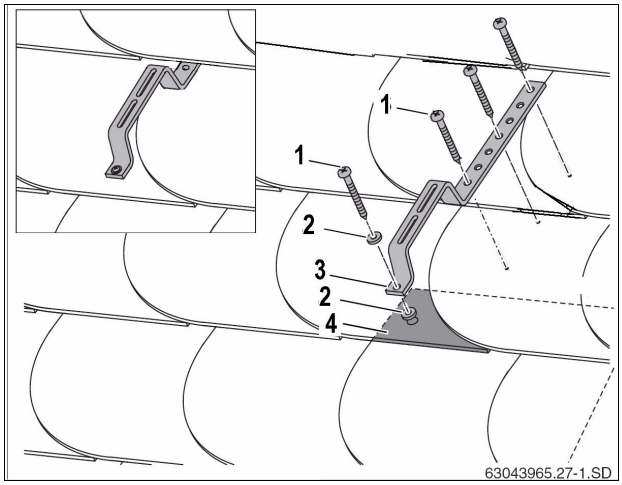

Fig. 23 Mounting on shingle roof

1 Screws
2 Gaskets (not supplied)
3 Roof hook
4 Bottom tile

5.6 Sheet Metal Roof Surfaces

5.6.1 Seamless metal roofs

NOTICE

These types of roofs require hiring a professional roofing company to ensure long term leak free operation.

Hanger bolts (Fig. 24) must be used for attaching the horizontal rails to the roof. Ensure the distances (w, x and y) between hanger bolts are maintained as described in Tab. 4 and Tab. 5, page 14.

The number of hanger bolts per panel must be based on the required snow and wind load. Minimum four (4) bolts per panel.

The roofer will install means to keep water from penetrating the roof, e.g. sleeves brazed to the roof (Fig. 24, [6]) have been used successfully for this purpose.

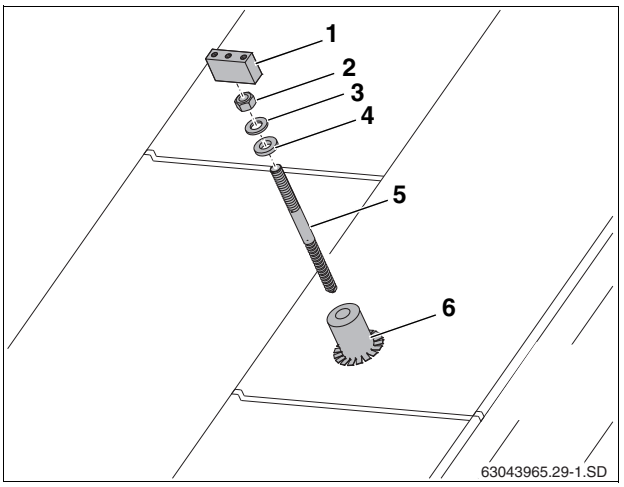

Fig. 24 Mounting on sheet steel roof

1 Attachment block
2 M12 nut
3 Washer
4 Gasket
5 M12 stud
6 Sleeve (example for a sealing method, provided by roofer)

NOTICE

For the sequence of installation for hanger bolts and horizontal rails, please refer to the instructions given in Chapter 5.4 "Hanger Bolt Installation".

CAUTION!

SYSTEM DAMAGE

due to an insufficient substructure.

- Ensure the building substructure is capable of carrying the load of the panels including the required snow and wind loads.
- Only attach to framing that is properly supported.
- Do not install hanger bolts in less than 2x6 framing.
- Follow the local building code and best practice when installing hanger bolts.

5.7 Installing high load rails (accessory)

The standard racks as described so far are suitable for installation heights up to 66 ft (20 m), standard snow loads up to 42 lbs/sqft (2.1 kN/m^2), and wind speeds up to 81 mph (129 km/h).

Additional measures are needed for installation heights up to 328 ft (100 m), standard snow loads up to 65 lbs/sqft (3.1 kN/m^2), and wind speeds up to 94 mph (150 km/h).

NOTICE

The example here shows an installation on tile. Procedures are similar for other roofing materials and surfaces. Refer to the relevant sections 5.2 to 5.6 for details.

Installing additional roof hooks or hanger bolts

Additional hooks or bolts and vertical support rails must be installed for attaching a third row of horizontal profiles.

- The third row (Fig. 25, [1]) should be centered between the upper and lower rows already installed.

NOTICE

On tile roofs there must be at least one free row of tiles between the upper, middle and lower roof hooks or hanger bolts.

Mounting the high load rails

- Push threaded clip (Fig. 26, [1]) onto the roof hook in the direction of the arrow.
- Place the vertical rail (Fig. 26, [2]) onto the roof hooks and tighten the M8 screws (Fig. 26, [3]).
- Verify the high load rails are level and plumb (use cord).

Installing the horizontal rails

The horizontal rails must be joined together before they are installed. Please see Chapter 5.8.1 "Connecting the horizontal rails".

- Place the horizontal rails (Fig. 27, [1]) into the indentations (Fig. 27, [2]) on the vertical rails and loosely fasten using screw and counter plate (Fig. 27, [3]) so that the rails can still be aligned.
- Repeat the same procedure for the other rails.

To continue with the installation, see Chapter 5.8.3 "Aligning the horizontal rails".

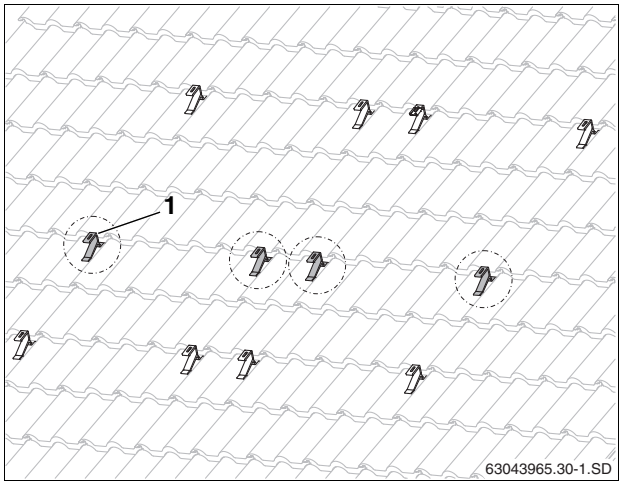

Fig. 25 Additional roof hooks for the accessory rails (here: for two collectors)

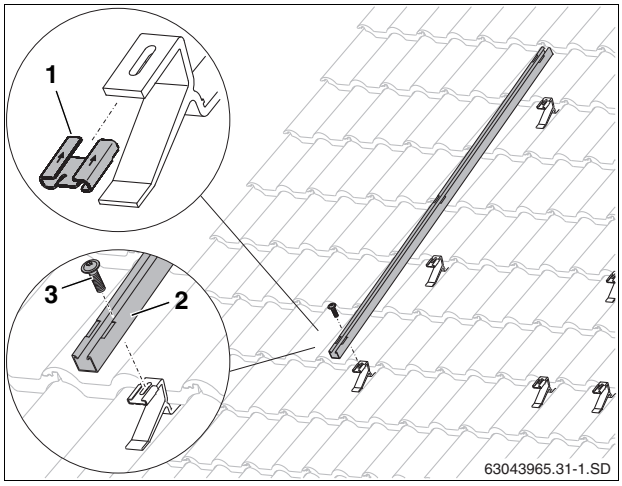

Fig. 26 Attaching the vertical rails

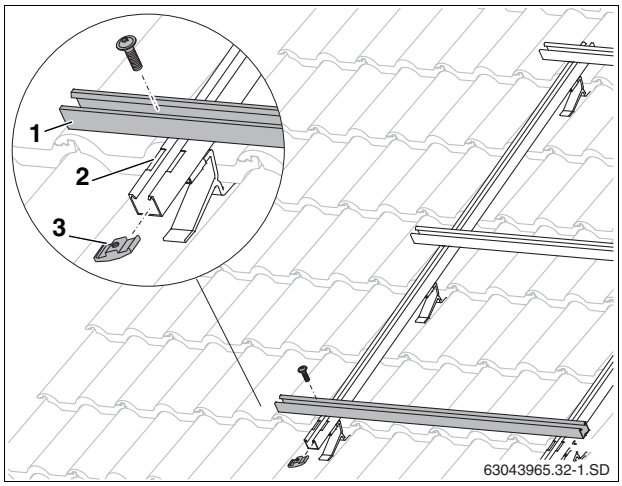

Fig. 27 Installing horizontal rails

5.8 Installing horizontal rails

The horizontal rails must be joined together using connectors. For standard installations each collector is equipped with one upper and one lower horizontal rail.

5.8.1 Connecting the horizontal rails

- Push connector (Fig. 28, [1]) as far as it will go into both rails (Fig. 28, [2]).
- To lock, tighten both installed M10 threaded studs (Fig. 28, [3]) using a size 5 Allen wrench.

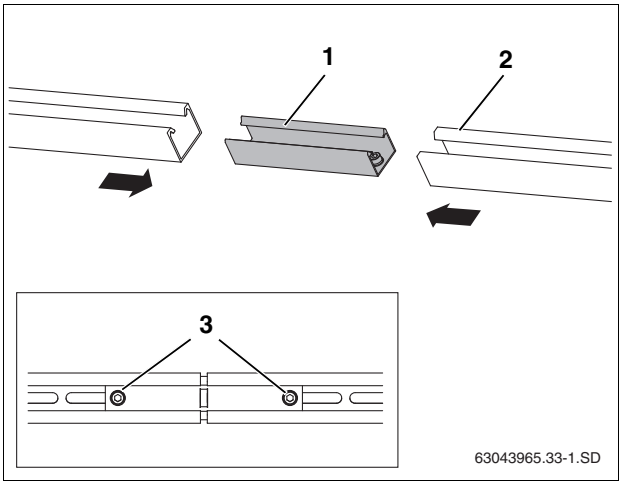

Fig. 28 Connecting horizontal rails

1 Connector
2 Horizontal rail
3 M10 threaded stud

5.8.2 Installing the horizontal rails

- Push threaded clip (Fig. 29, [1]) onto the roof hook in the direction of the arrow.
- Place the lower horizontal rails (Fig. 29, [2]) onto the roof hooks and loosely fasten M8 bolt (Fig. 29, [3]) so that the rails can still be aligned.
- Carry out the same procedure for the upper rails.

NOTICE

Use a tape measure and a level to verify the rails are plumb and properly aligned. Improperly aligned rails not only reflect poorly on the installer but also may put stress onto the collectors causing premature failure.

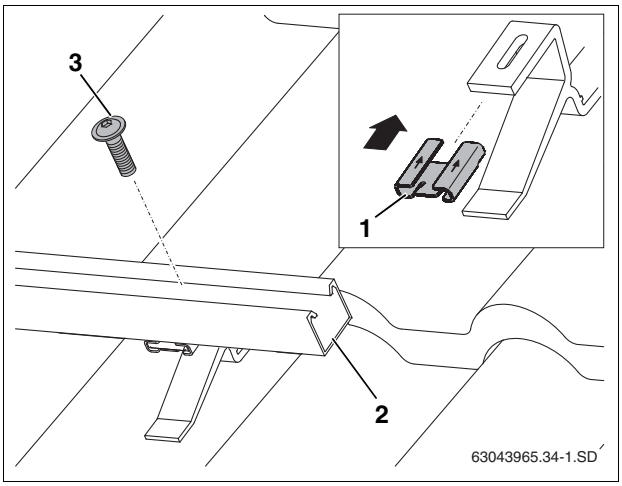

Fig. 29 Fastening profile rails to the roof hook

1 Threaded clip
2 Horizontal rail
3 Screw

5.8.3 Aligning the horizontal rails

- Align the upper and lower horizontal rails evenly side to side and to each other using a level and a cord (Fig. 30).

NOTICE

Use a tape measure or a cord to compare the diagonal distances across, which must be identical for the installation to be square (Fig. 30, [1]). Correct it before proceeding if this is not the case.

- Tighten all screws.

NOTICE

Ensure the horizontal rails do not sag. Use a cord to confirm. Install spacers to correct for differences in height.

Uneven or sagging profile rails may put stress on collectors and connections and may result in leaks and reduced service life.

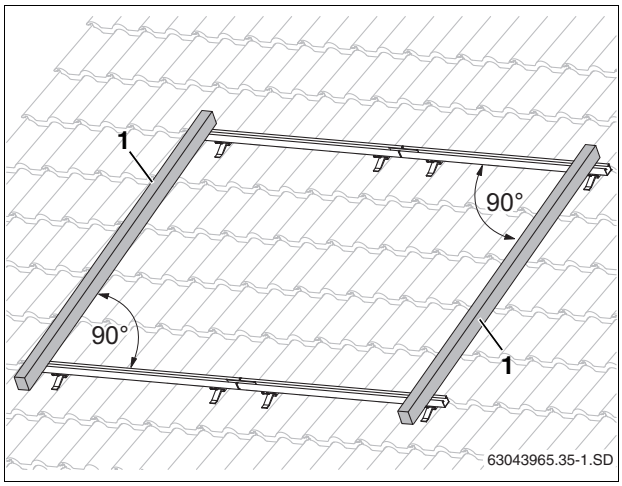

Fig. 30 Aligning the horizontal rails (high load rails not shown)

5.8.4 Installation of collector hangers

To carry the weight of the collectors two collector hangers are used which are snapped into the lower horizontal rail.

- Install the collector hanger (Fig. 31, [3]) at the innermost slotted holes (Fig. 31, [1]) on the lower horizontal rails until it snaps into place (Fig. 31, [2]).

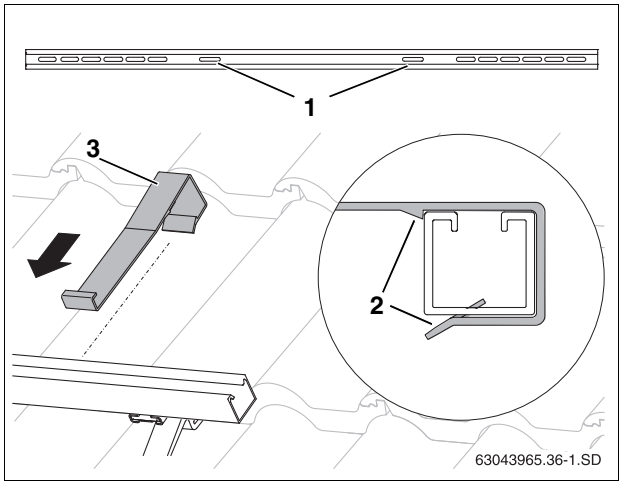

Fig. 31 Attaching collector hanger

1 Slots reserved for the hanger

2 Both teeth must engage with the rail

3 Collector hanger

6 Collector Installation

Observe the following safety and user instructions when commencing the collector installation.



RISK TO LIFE

from a fall or falling tools and parts.

- Installing collectors requires at least two people.
- Take appropriate action to prevent accidents when working on roofs.
- While working on the roof, take all necessary precautions against a possible fall.
- Always wear protective clothing and use your personal protective equipment (PPE).
- After completing an installation always verify that all components are installed according to the instructions and are securely attached.

SYSTEM DAMAGE

from damaged connections.

- Do not remove the plastic caps on the collector connections until immediately prior to installation.

NOTICE

Use a boom truck, scissor lift, or similar for accessing the roof.

For carrying the collectors use equipment used by window installers.

NOTICE

Unsecured collectors may fall during handling and installation.

NOTICE

Two of the protective corners of each collector's packaging hold connectors and clips needed for installation. Do not throw those out before removing those parts!

Fig. 32 View of roof mounting with collectors

6.1 Preparing to install the collectors

Before beginning the installation on the roof, preassemble the end caps on the ground to make work on the roof easier.

Push the end cap onto the collector connection until it hits the stop. Slide a clip sideways over the notches to secure the cap in place. The clip must snap into place (→ 6.1.2)

CAUTION!

SYSTEM DAMAGE

from leaks in the collector connections.

The collector connections, end caps, corrugated pipe connectors, and collector connection sets must be clean and free from any sign of damage in order to be able to establish a good seal.

- Inspect the inside of each connector for the double O-rings seated properly before installation.
- The collector connections have had special grease applied at the factory to make installation easier. Do not use any other grease.

6.1.1 Hydraulics

Each collector has a sensor well which must be at the top when installed on the roof (Fig. 34, [1]).

NOTICE

Supply and return pipes can be connected from the right (Fig. 33), the left (Fig. 34), or diagonally (Fig. 35) across.

NOTICE

It is recommended to have the roof penetration for the hydraulic piping as close to the collector as it is feasible, and run as little piping above the roof as possible.

The pipework in the collector is designed as a double meander, which allows two different hydraulic setups:

Single-sided connection of up to 5 collectors

Up to 5 collectors can be connected from one side of a collector array (Fig. 33 and Fig. 34).

Diagonal connection of up to 10 collectors

If piped in a diagonal fashion (Fig. 35), up to 10 FKT-1 collectors can be combined to one consecutive array.

Diagonal connections are also encouraged if there are fewer than 6 collectors (Fig. 35).

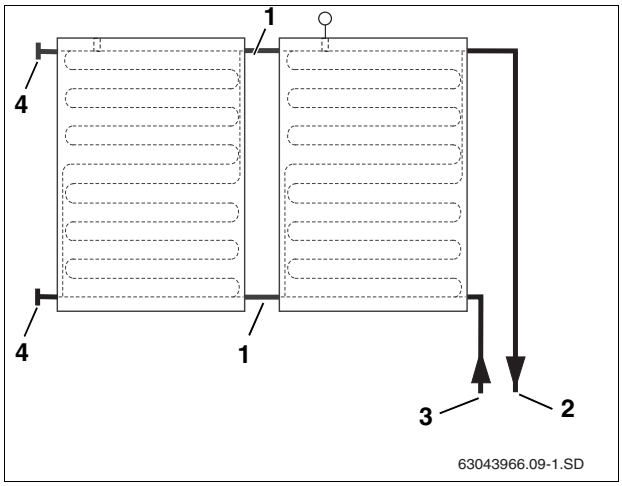

Fig. 33 Hydraulic connection (right) up to max. 5 collectors

1 Corrugated pipe connector
2 Supply line
3 Return line
4 End cap

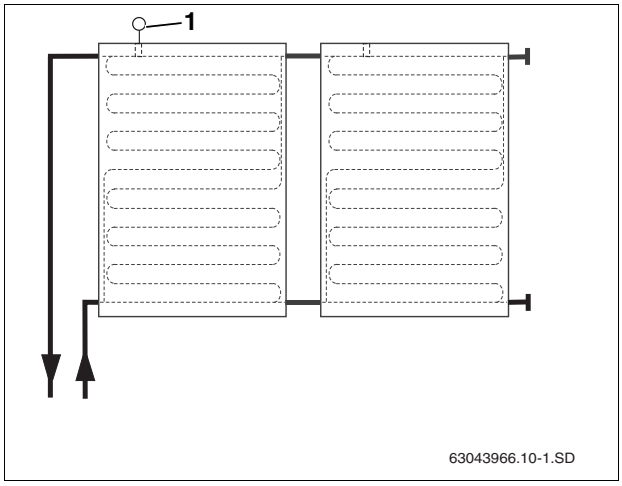

Fig. 34 Hydraulic connection (left) up to max. 5 collectors

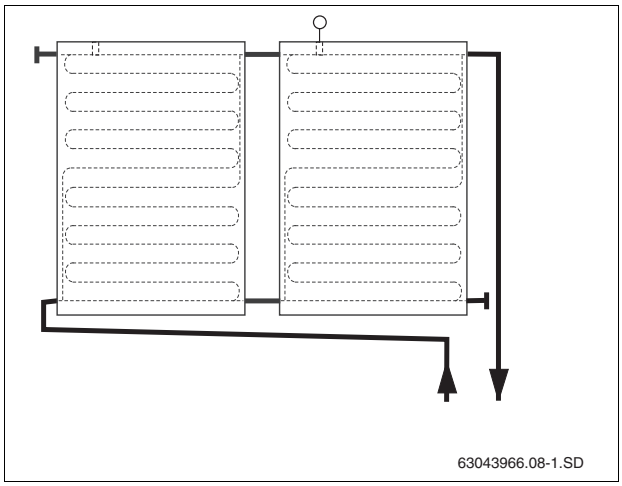

Fig. 35 Diagonal water connections

6.1.2 Installing the end cap

Not all the connections are needed when connecting a collector array. Those that are not used must be capped.

- Remove rubber caps (transport protection) from the relevant collector connections.
- Push end cap with the O-rings (Fig. 36, [1]) onto the collector connection.
- Push clip sideways (Fig. 36, [2]) over the end cap and collector connection to secure it in place.

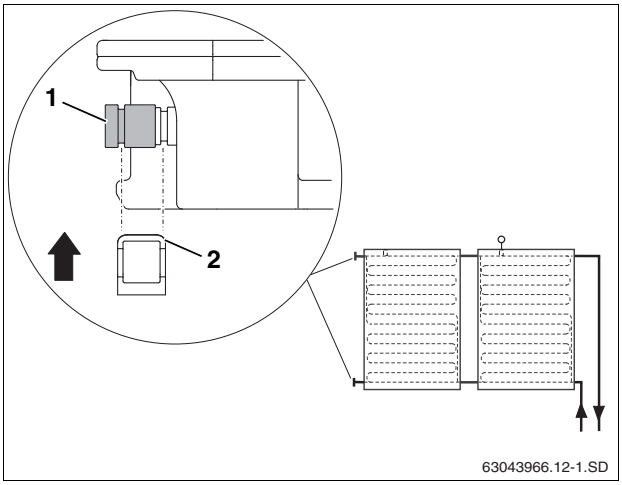

Fig. 36 Securing end cap with clip

6.2 Mounting the collectors

The collectors are attached to the horizontal rails using single-sided collector clamps (Fig. 36, [2]) at the two ends of a collector array, and double-sided clamps (Fig. 36, [1]) between two collectors.

The clamps hold the collectors in place while the collector hangers are carrying their weight.

NOTICE

The collector clamps are spread apart using small plastic pieces that break off when tightening the Allen screw. Discard this piece.

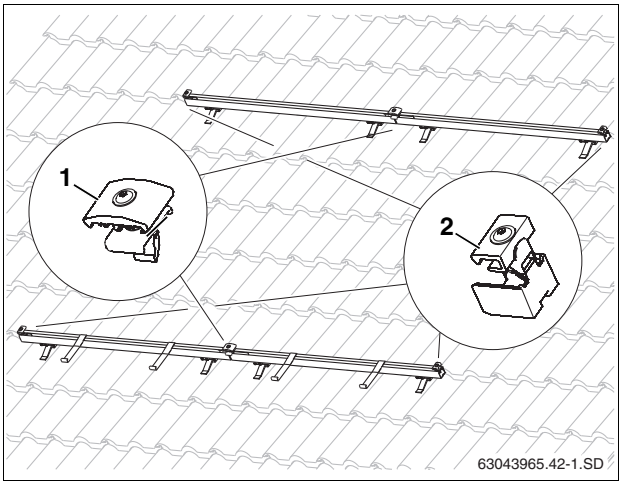

Fig. 37 Single and double sided collector clamps

Installing a single sided clamp

- Push single-sided collector clamp (Fig. 37, [1]) onto each horizontal rail at one end of the collector array until it clicks into the first slot.

NOTICE

Do not install clamps on the opposite side of the array until the last collector has been installed.

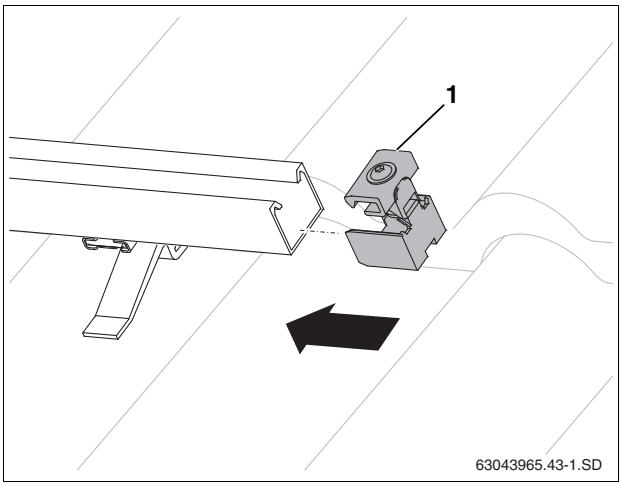

Fig. 38 Pushing on the single-sided collector clamp

Placing the first collector onto the rack

Lay the collector on the horizontal rails in such a way that the sensor well is at the top.

CAUTION!

RISK OF INJURY

At least two people are required for installing collectors.

- Place the first collector onto the horizontal rails and allow it to slide into the collector hangers (Fig. 39).

The lower collector edge must engage evenly with the hooks of both collector hangers. (Fig. 39, [1]).

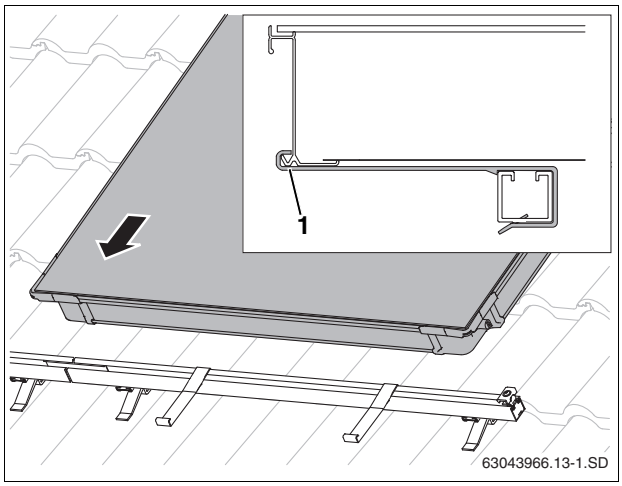

Fig. 39 Laying the first collector on the profile rails

- Carefully push collector (Fig. 39, [1]) up against the single-sided collector clamp and align horizontally.
- Tighten the screw on the single-sided collector clamp (Fig. 39, [2]) using size 5 Allen key.

NOTICE

When the screw is tightened, the plastic spacer holding the clamp apart will break away. Discard this piece.

The hook on the collector clamp (Fig. 39, [2]) now grips the lower collector edge.

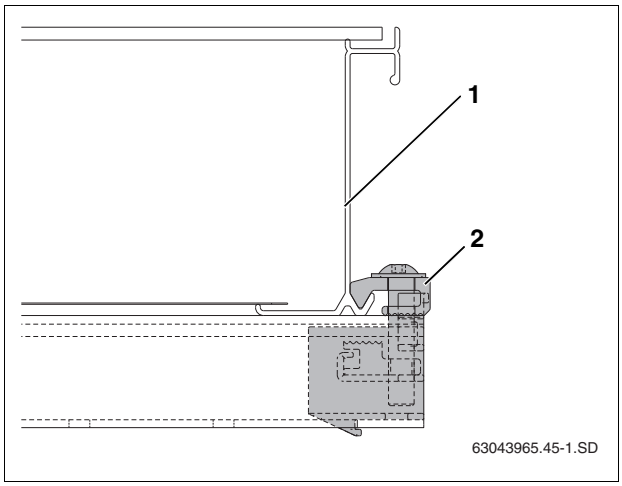

Fig. 40 Single-sided collector clamp in place

Installing a double-sided collector clamp

- Insert the double-sided collector clamp, nut first, into the connector between two horizontal rails, then turn 90 degrees clockwise and push down onto the rail with the plastic cover (Fig. 41, [1]) sitting on top of the horizontal rail.
- Push double-sided collector clamp against the collector frame.

NOTICE

Do not tighten the screw until the second collector has been pushed against the double-sided collector clamp.

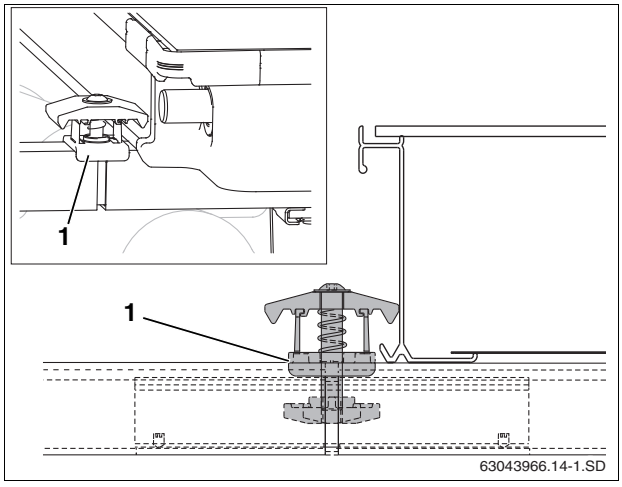

Fig. 41 Fitting a double-sided collector clamp

Installing the corrugated pipe connectors

- Remove the rubber caps from the connections.
- Push corrugated pipe connectors (Fig. 42, [1]) onto the connections where the next collector will be connected. Verify they are pushed in as far as they will go.
- Slide clip sideways (Fig. 42, [2]) over the corrugated pipe connector and collector connection to secure it in place.

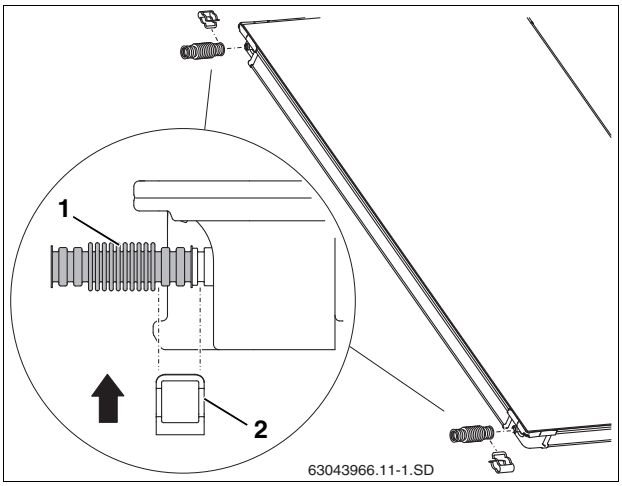

Fig. 42 Fitting corrugated pipe connectors to the first collector

Sliding the second collector in place

- Place the second collector onto the horizontal rails and allow it to slide into the collector hangers.

CAUTION!

SYSTEM DAMAGE

from damaged corrugated pipe connectors.

- Do not use any tools, e.g. pliers (Fig. 43, [2]). These could render the corrugated pipe connector unusable.

- Push the second collector toward the first in such a way that the collector connections are pushed into the corrugated pipe connectors (Fig. 43, [1]) of the first collector. You may have to push the connector by hand the last 1/4" until it hits the stop. Verify it is engaged properly.
- Place second clip (Fig. 43, [3]) over the corrugated pipe connector and collector connection.

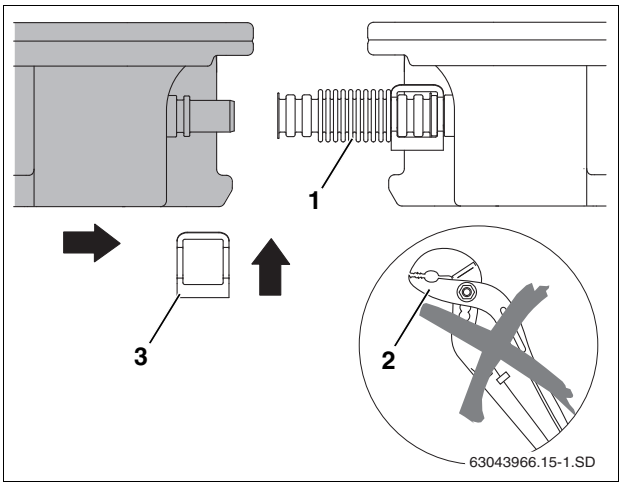

Fig. 43 Pushing second collector toward the first

CAUTION!

SYSTEM DAMAGE

from unsecured corrugated pipe connectors and end caps.

- Verify each end cap is secured with one clip and each corrugated pipe connector with two clips (Fig. 44, [1]).

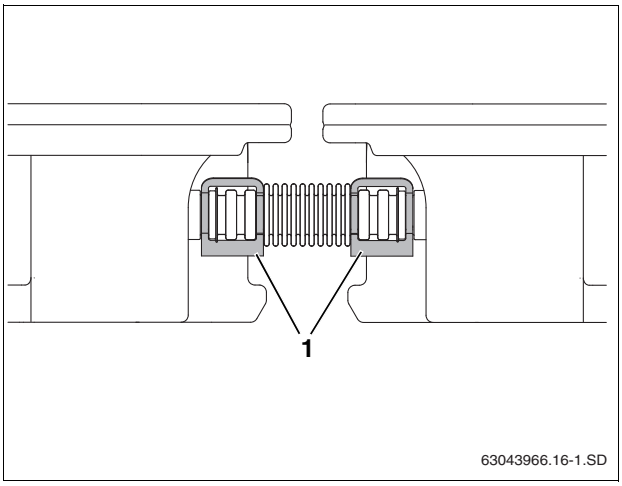

Fig. 44 Corrugated pipe connector secured with clips

- Tighten the screw on the double-sided collector clamp using the size 5 Allen key. Verify the clamp engages with the lower edge of the collector. It may be necessary to slightly adjust the position of the second collector.

NOTICE

When the screw is tightened, the plastic spacers holding the clamp apart will break away. Discard this piece.

The hook (Fig. 45, [1]) on the collector clamp now grips the lower collector edges.

Repeat the procedure for all the other collectors.

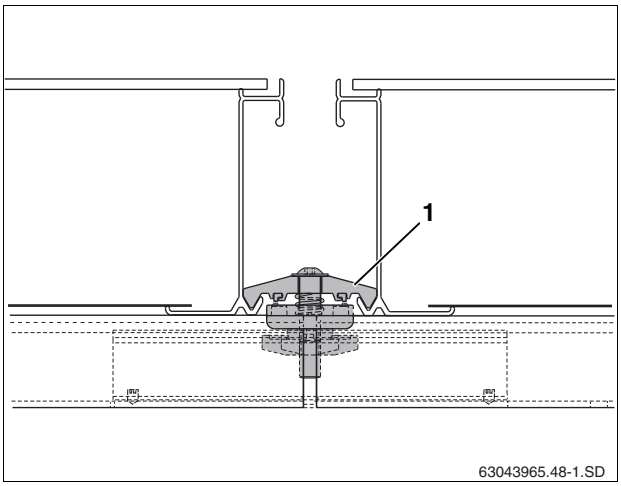

Fig. 45 Double-sided collector clamp between two collectors

Installing the single sided collector clamp on the last collector

Once all collectors are installed, the two remaining single-sided collector clamps can be attached.

- Push the single-sided collector clamp (Fig. 46, [1]) into all profile rails.
- Push collector clamp up against the collector frame and screw in place using size 5 Allen key (Fig. 46, [2]).

NOTICE

When the screw is tightened, the plastic spacer holding the clamp apart will break away. Discard this piece.

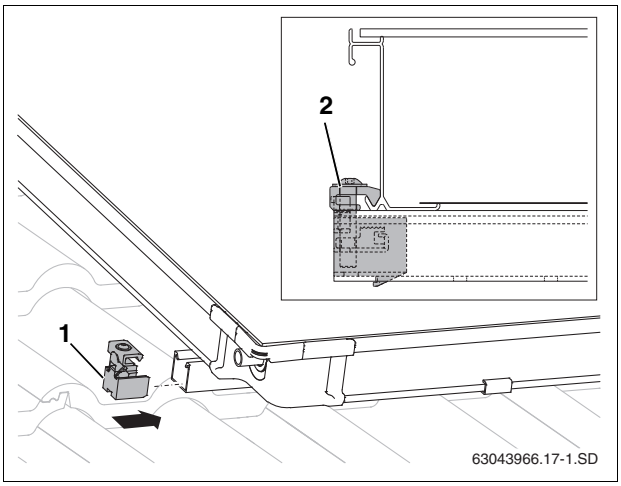

Fig. 46 Single-sided collector clamp (left)

7 Collector sensor

NOTICE

The collector sensor is included with the solar controller.

Observe the installation location for single or dual row collector systems (Fig. 47).

SYSTEM DAMAGE

from damaged sensor cable.

CAUTION!

- ▶ Protect the cable from possible damage (e.g. by birds and rodents).

Sensor location

The collector sensor must be installed in the collector connected to the supply line (Fig. 47, [2]).

– Location (Fig. 47, [A]) for single row collector systems.

– Location (Fig. 47, [B]) for multi-row collector systems.

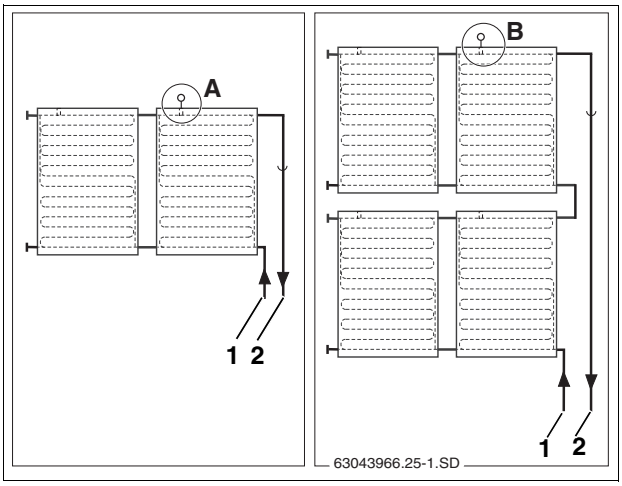

Fig. 47 Collector sensor installation location (schematic)

1 Return line

2 Supply line

Installing the collector sensor

The collector sensor (Fig. 48, [1]) must be inserted into the sensor well as far as it will go (approx. 10" (250 mm)).

- ▶ Using a pointy device penetrate the membrane on the outside of the sensor well (Fig. 48, [3]).
- ▶ Screw strain relief (Fig. 48, [2]) into sensor well.
- ▶ Insert collector sensor approx. 10" (250 mm) into the sensor well (until it bottoms out).
- ▶ Tighten strain relief by hand (Fig. 48, [2]).

NOTICE

If by accident the membrane (Fig. 48, [3]) of the wrong collector was penetrated, cap it by pushing a black collector connection cap onto the well. For that the nut installed at the outside of the well must be removed.

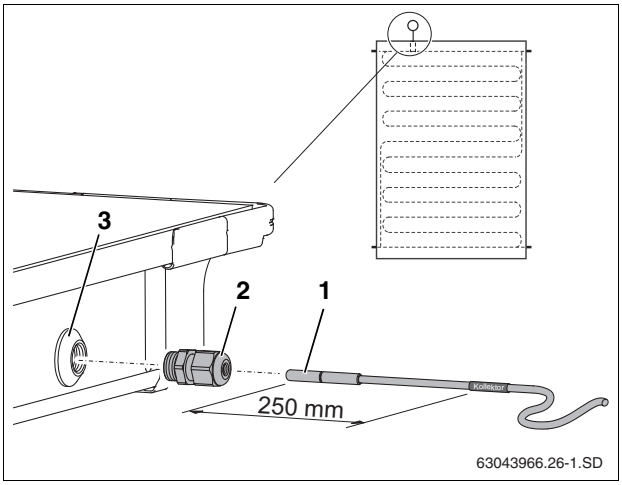

Fig. 48 Inserting the collector sensor into the sensor well

1 Collector sensor

2 Strain relief

3 Sensor well

Route the sensor cable along the pipework using zip ties.

8 Hydraulic connections

Details on how to route the supply and return piping and how to pipe multiple collector arrays can be found in the installation instructions of the Solar Pump Station and the Solar Technical Design Guide.

Use the hydraulic collector connection set with its flexible corrugated pipes to connect the collectors to the supply and return piping. It is not permitted to hook a rigid pipe directly to the collector.

NOTICE

The corrugated connector connection pipes can be cut to length if needed.

NOTICE

For the roof penetration use special tiles or flashings available for this purpose or roof jacks. If a job requires a custom solution, consult a professional roofing contractor.

NOTICE

Feed the sensor cable together with the supply pipe under the roof.

NOTICE

It is recommended to install an automatic air vent at the highest point of the installation. The air vent can be installed directly on the collector where the supply line connects, or in the attic where the connection set hooks up to the supply piping toward the pump station. In either case in order to work properly the air vent must be positioned perfectly vertically.

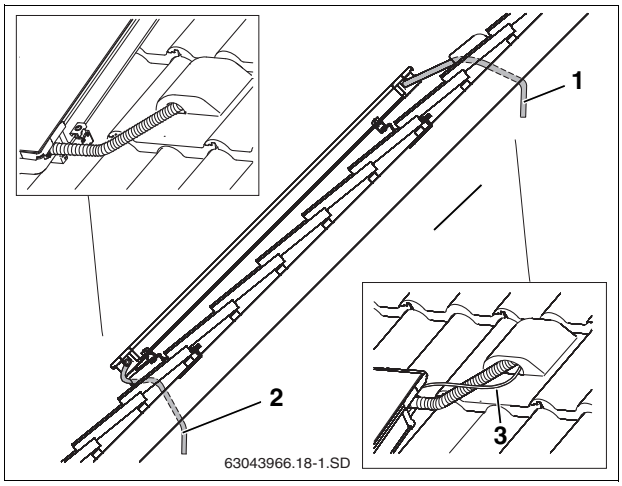

Fig. 49 Routing connection pipes under the roof

1 Supply line (shown without insulation)

2 Return line (shown without insulation)

3 Sensor cable

8.1 Installing an air vent (accessory)

Automatic air vents (accessory) simplify filling, commissioning, and servicing of solar thermal systems. In order for the air vent to work properly, it must be installed at the highest point of the system and all supply and return piping should be sloped toward the collectors (Fig. 50).

NOTICE
When using corrugated stainless steel piping for extended lengths of the supply and return lines, an automatic air vent is required.

Avoid frequent changes in direction.

NOTICE
If the system requires significant dips in the pipework, it may be necessary to install additional air vents in order to be able to remove all the air during commissioning.

If an automatic air vent can not be installed due to space restrictions, use a manual air vent valve.

NOTICE
Only use air vents that are rated for the temperatures and glycol fluids of solar systems.

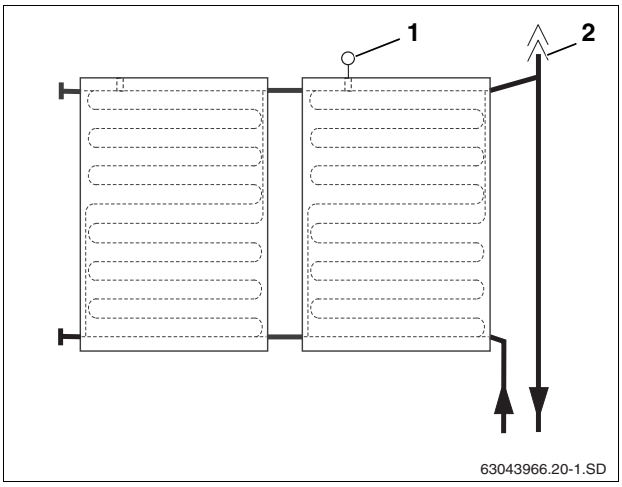

Fig. 50 Air vent installed on the supply connection

1 Collector sensor
2 Automatic air vent

Description of the automatic air vent

The automatic air vent contains a float that opens a valve if air is collecting and releases the air to the outside. The valve closes once the air was released and liquid reaches the float. The air vent must be positioned perfectly vertically. Otherwise the float may not work properly.

During stagnation steam is generated which would escape through the air vent. Therefore a ball valve is installed before the air vent which must be closed after the system is commissioned. Only during servicing may the ball valve be opened.

The air vent has a bleeder screw at its top protected by a weather cap (Fig. 51, [1]). In order to prevent contamination this weather cap must always be installed. To bleed air from the system open the ball valve and unscrew the bleeder screw one full revolution. Close both after completing the operation.

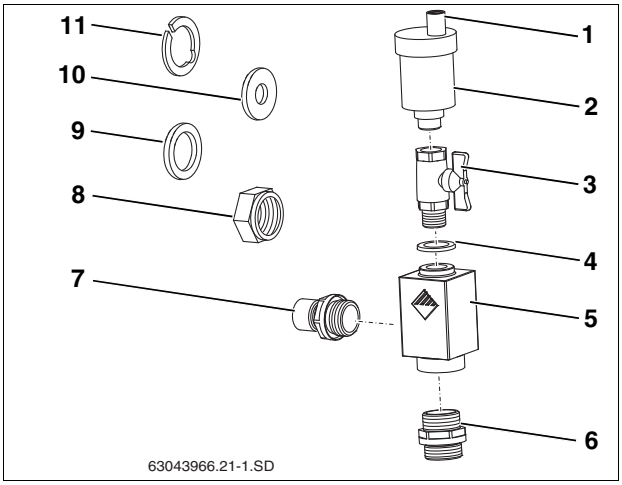

Fig. 51 Automatic air vent FKT-1

Automatic air vent kit FKT-1 (Fig. 51):

1	Weather protection cap	1 ×
2	Automatic air vent	1 ×
3	Ball valve	1 ×
4	Gasket	1 ×
5	Vent body	1 ×
6	Double nipple with O-ring	1 ×
7	Nipple R¾ with collector connection	1 ×
8	Union nut	2 ×
9	Gasket	1 ×
10	Large diameter washer	1 ×
11	Split compression washer	1 ×

8.1.1 Installing the air vent valve under the roof

Installing the air vent in the attic allows servicing the system without accessing the roof.

In order for it to work properly, it is essential to position the air vent above the collectors.

- Push connection pipe (Fig. 52, [3]) onto the supply connection of the collector and secure in place using the clip (Fig. 52, [5]).
- Feed connection pipe together with the sensor cable through the penetration (Fig. 52, [4]) into the attic. The supply piping must be sloped away from the collectors toward the air vent.

Perform the same procedure with the return connection, except that the return piping should be sloped toward the collector array.

- Remove union nut and compression washer from connection pipe.
- Firmly screw connection pipe (Fig. 52, [3]) and double nipple (Fig. 52, [1]) into air vent body (O-ring gasket).
- Hook the connection pipe to double nipple with compression fitting (Fig. 52, [1]).

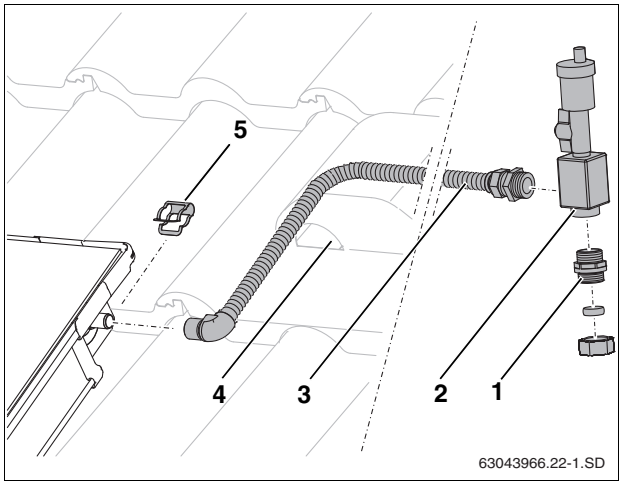

Fig. 52 Fitting the air vent valve under the roof (Insulation no shown)

1 Double nipple with O-ring
2 Air vent body
3 Connection pipe
4 Roof penetration
5 Clip

8.1.2 Installing the air vent valve on the collector above the roof

With the air vent mounted directly on the collector, the flexible connection pipe is used to bring the supply pipe into the attic and hook up to the supply piping to the pump station. The flexible return pipe is used as described in Chapter 8.1.1.

To connect the connection pipe to the air vent (supply connection), its elbow must be replaced with a double nipple.

- Cut elbow (Fig. 53, [1]) from connection pipe using pipe cutters (Step 1).
  Cut in the valley of the corrugation. Establish a clean cut without a rough edge.
- Push union nut over the connection pipe (Step 2).

Making the sealing face:

- Separate one of the cuts of the split compression washer and bend it open. Slide over the first valley of the corrugated pipe and close it again (Fig. 53, [2]). The closed compression washer must be positioned evenly on the collar of the union nut once pulled forward.
- Place large diameter washer (Fig. 53, [3]) into the union nut in front of the cut surface of the connection pipe.
- Firmly screw double nipple (Fig. 53, [4]) into union nut, which will create a flat sealing surface on the connection pipe.
- Remove double nipple and large diameter washer and verify that a flat sealing surface has been created.
- Remove any burrs as required.
- Insert gasket (Fig. 53, [5]) and reassemble double nipple.

Connection to the collector:

- Firmly screw nipple (Fig. 54, [5]) and connection pipe (Fig. 54, [2]) into vent body (Fig. 54, [1], O-ring gasket).
- Push vent body and nipple onto collector connection as far as it will go and secure with a clip (Fig. 54, [6]).
- Feed connection pipe together with the sensor cable through the penetration (Fig. 54, [4]) into the attic. Ensure that the air vent is positioned perfectly vertically otherwise the float will not work properly.
- Connect the supply piping from the pump station to the compression fitting (Fig. 54, [3]).

NOTICE

Install return connection as described in Chapter 8.1.1.

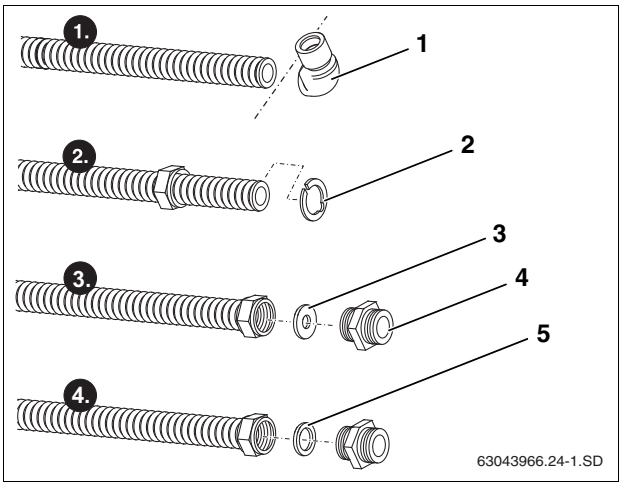

Fig. 53 Preparing the connection pipe

1 Elbow
2 Split compression washer
3 Large diameter washer (for making sealing face)
4 Double nipple
5 Gasket

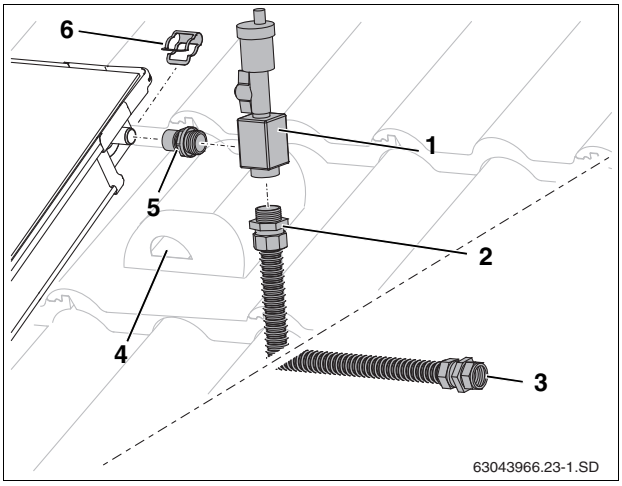

Fig. 54 Fitting the air vent (insulation not shown)

1 Air vent body
2 Connection pipe
3 Compression fitting 3/4" (18 mm)
4 Roof penetration
5 Nipple R¾
6 Clip

9 Connecting Two Collector Arrays (accessory)

The collector array connection set (Fig. 55, [9]) is available as an accessory and allows connecting two collector arrays in series that are located in close vicinity of each other.

NOTICE

It is recommended to assemble these pipes on the ground to make work easier and avoid loss of parts.

Scope of delivery (Fig. 55)

1	End cap	2 ×
2	Connection pipe	1 ×
3	Elbow	1 ×
4	Gasket	1 ×
5	Large diameter washer	1 ×
6	Split compression washer	1 ×
7	Compression ring	2 ×
8	Union nut G1	1 ×

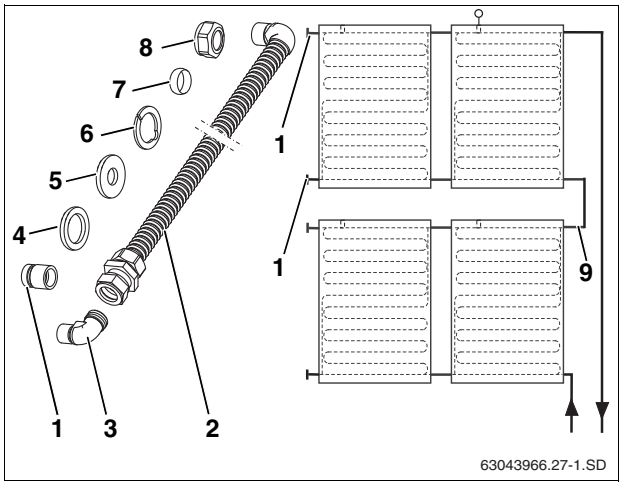

Fig. 55 Schematic diagram and scope of supply

Fitting additional end caps

Use the end caps to close any collector connections not in use (Fig. 55, [1], see Chapter 6.1.2 "Installing the end cap", page 29).

NOTICE

If the connection pipe is too long, shorten it by following the installation steps described in "Making the sealing face:", page 37.

Installing the connection set as is

- Remove double nipple and compression fitting from connection pipe.
- Insert gasket (Fig. 56, [2]) into union nut.
- Insert elbow (Fig. 56, [3]) into union nut G1, align and tighten.
- Push connection pipe (Fig. 56, [1]) onto the collector connections and fix in place using clips (Fig. 56, [4]) from the connection kit.

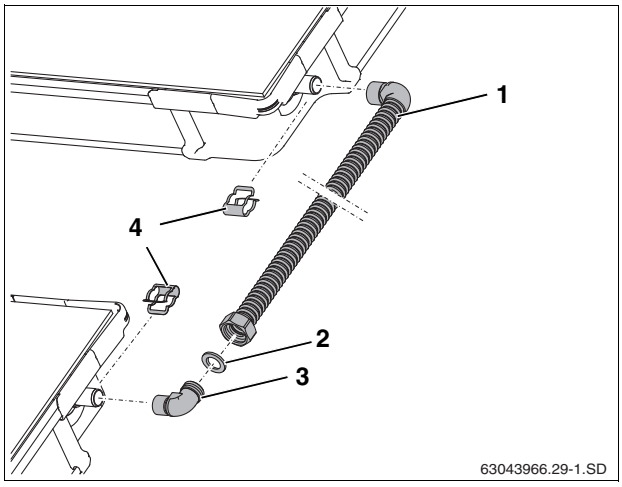

Fig. 56 Connection set between two collector rows

Extending the connection set with rigid copper pipe

- Slide union nut and compression ring (Fig. 57, [2]) over the copper pipe (3/4" (18 mm), Fig. 57, [1]).
- Cut copper pipe to required length.
- Insert pipe into both compression fittings and tighten.

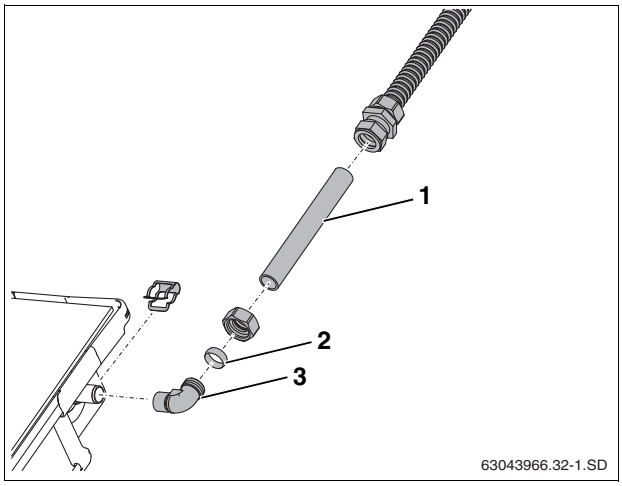

Fig. 57 Extending the length of the connection pipe

10 Final activities

10.1 Checking the installation



CAUTION!

SYSTEM DAMAGE

from freezing or corrosion if pure water without antifreeze remains in the solar system for an extended period after flushing or after a pressure test.

- Commission the solar system immediately after flushing/pressure test with solar fluid (for instructions on flushing/pressure test see pump station instructions). Otherwise, do not carry out flushing/pressure testing until ready to commissioning right away.

NOTICE

Carry out the final insulating work only once all necessary checks have been performed.

Checks

1.	Corrugated pipe connector, end caps and connection pipes secured with clips?	☐
2.	Horizontal rails connected to roof hook and threaded clip?	☐
3.	Collector hanger installed and snapped in horizontal rails?	☐
4.	Sensor inserted as far as it will go and secured with strain relief?	☐
5.	Pressure test carried out and all connections leak-proof (see pump station instructions)?	☐

NOTICE

Ensure the ball valve on the automatic air vent is closed after commissioning.

10.2 Insulating the Pipes above the Roof

▶ Cut provided insulation 28" (710 mm) into 3.5" (88 mm) pieces and wrap around the corrugated pipe connectors between the collectors.

Insulation of the pipework in internal or external installations

– For the insulation of external pipework, use only UV and high temperature resistant insulating materials.

– For the insulation of internal pipework, use only high temperature resistant insulating materials.

– Use only material that is bird and rodent proof.

– Verify all penetrations are weather proof and discourage critters from entering the building.

11 Quick reference guide for tile roof and pressure filling

These instructions are only intended as an overview of the work to be carried out. You MUST follow the detailed descriptions for the work on the pages mentioned, and observe all safety and user instructions.

Fitting roof hooks and horizontal rails

1. Turn lower part of roof hook upward. Determine locations for the roof hooks while observing the distances given in (Chapter 5.1 "Rail and hook spacing", page 14). p. 16
2. Determine settings of the roof hook. p. 16
3. Connect horizontal rails together using rail connectors. p. 25
4. Fasten horizontal rails to roof hook p. 25
5. Align horizontal rails horizontally and laterally flush with each other. p. 26
6. Install collector hangers. p. 26

Preparing to install the collectors

7. Push end caps onto those connections that are not needed and secure using clips. p. 29

Fastening the collectors

8. Push single-sided collector clamp into horizontal rails. p. 29
9. Place first collector onto horizontal rails and push onto collector clamp. p. 29
10. Tighten single-sided collector clamps. p. 29
11. Place double-sided collector clamp into horizontal rail and push onto first collector. p. 30
12. Push corrugated pipe connectors onto the connections on the first collector and secure with clips. p. 31
13. Push second collector towards the first and fit second bracket. p. 31
14. Tighten screws on the double-sided collector clamp. p. 31
15. Repeat the procedure for all other collectors. p. 32
16. Fit single-sided collector clamps on outside. p. 32

Header connection

17. Insert collector sensor as far as it will go into the sensor well on the collector with the supply connection and secure. p. 33
18. Install connection pipes on the supply and return connections and secure with clips. p. 36
19. Feed supply connection pipe together with sensor cable through roof penetration. p. 36
20. Perform installation checks. p. 39
21. Insulate header pipes and corrugated pipe connectors with UV and high temperature resistant material. p. 40

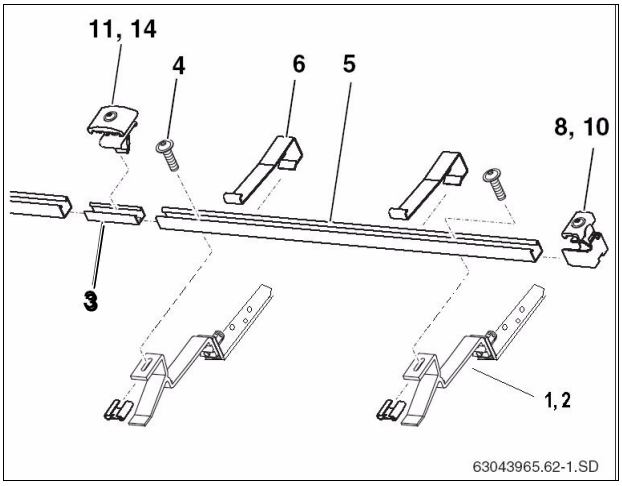

Fig. 58 Roof mounting

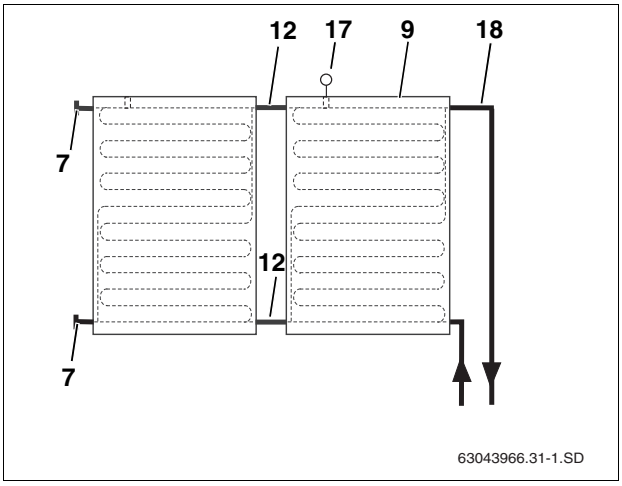

Fig. 59 Hydraulic connections

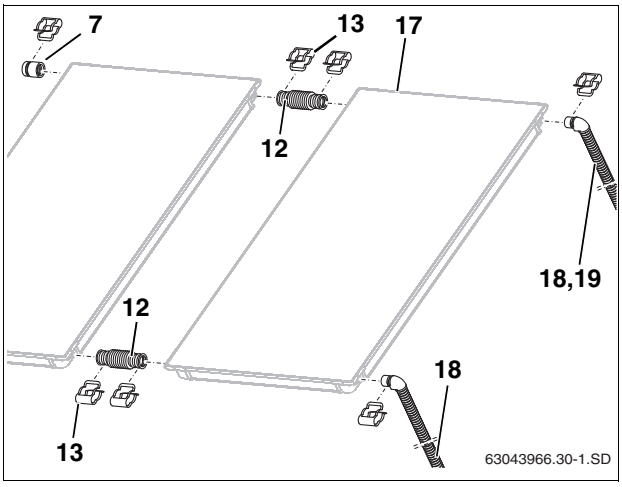

Fig. 60 Fitting the collector sensor and header pipes

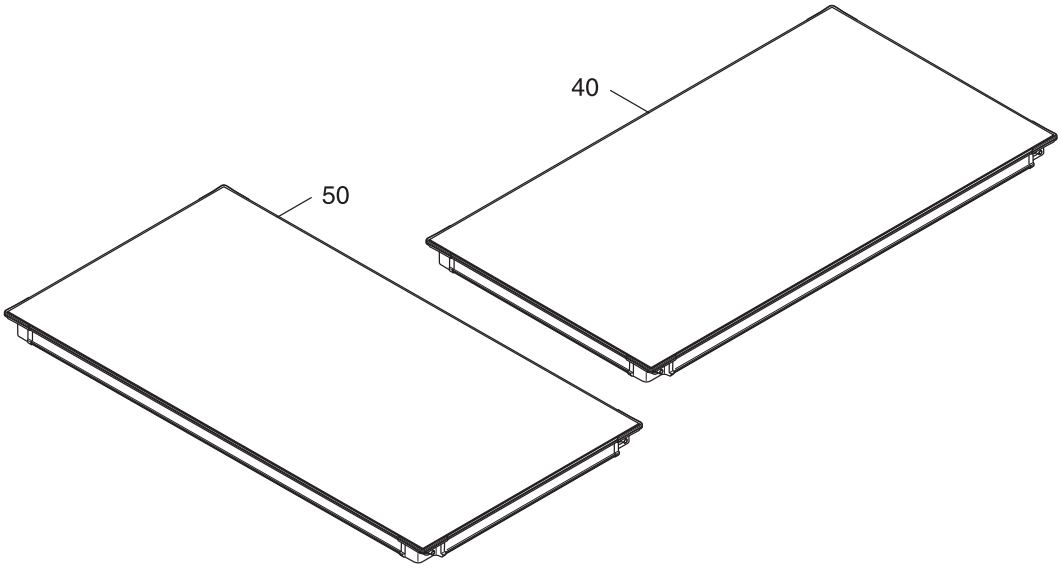
40
50


BOSCH
FKT-1S US/CA
8 718 530 424
Reg.-Nr.: 00000000
315 FD 002 000004
Dimensions: 2070x1145x90mm
Year of production: 2010
Made in Germany
CE 0036
A_G: 2.37 m²/2.83yd²
p_{max}: 6 bar/87 psi
P_{pr}: 9 bar/131 psi
t_{stg}: 188°C/370°F
V_F: 0.86 l/0.227 gal
m: 41 kg/91 pound
Fluid: H_2O/PP-Glycol 50/50 & 70/30

Item	Part Number	Description	Weight
40	7747021975	FKT-1-S Solar Flat Plate Collector Portrait (vertical)	104 1/2
50	7747021976	FKT-1-W Solar Flat Plate Collector Landscape (horizontal)	106 1/2

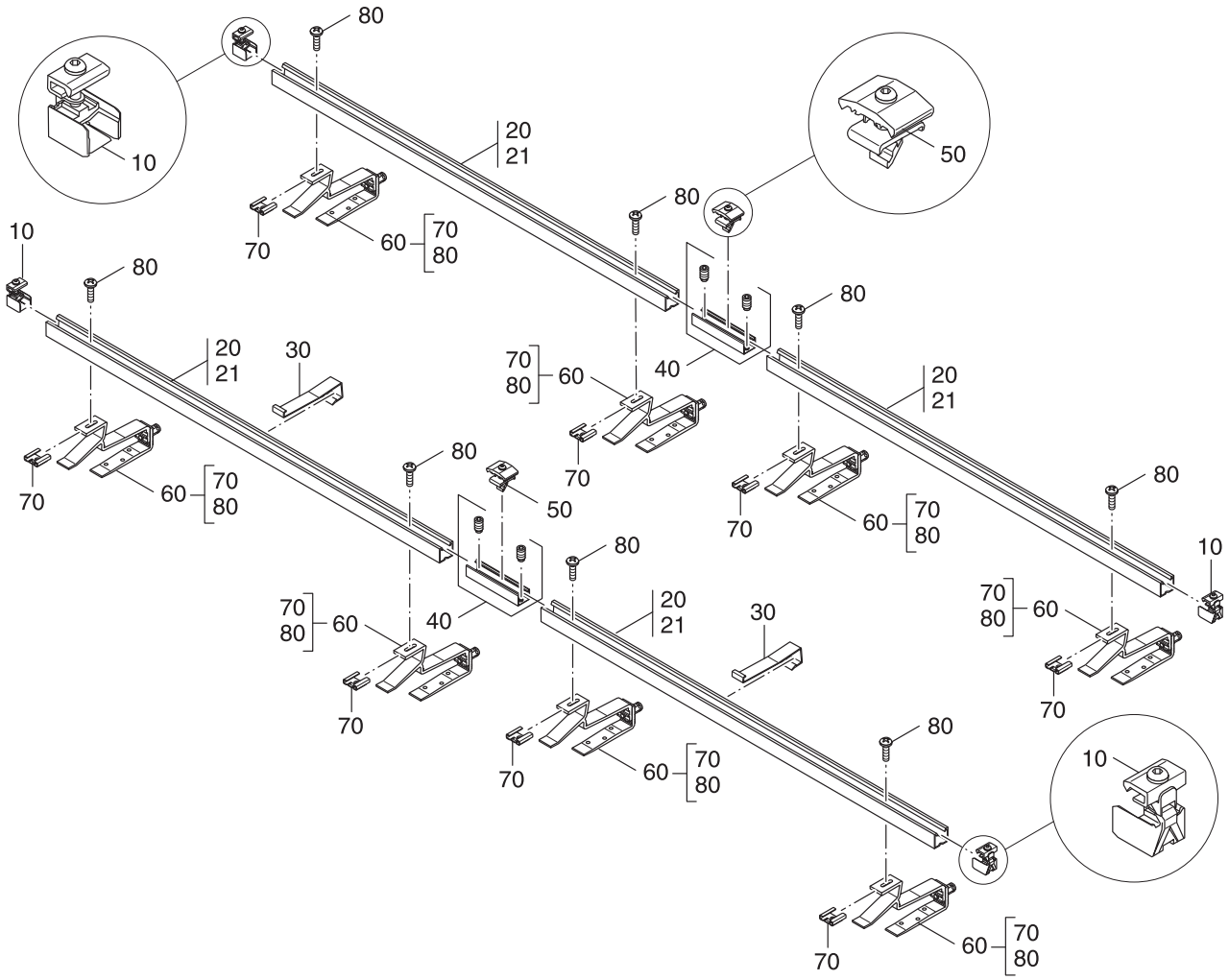

67910060-00-On roof mounting hardware vertical - horizontal

Item	Part Number	Desciption	in lb
10	63045246	Single-sided collector clamp	0.2
20	63045239	Horizontal rail, Portrait collector	3.1
21	63045240	Horizontal rail, Landscape collector	5.5
30	63045243	Collector hanger	0.22
40	63045241	Connector rail connector	0.25
50	63045244	Double sided collector clamp	0.26
60	63045233	Roof hooks adjustable kpl	0.66
		Available individual part:	
70	63045237	Threaded clip M8	0.06
80	x	Screw M8x25 m.	

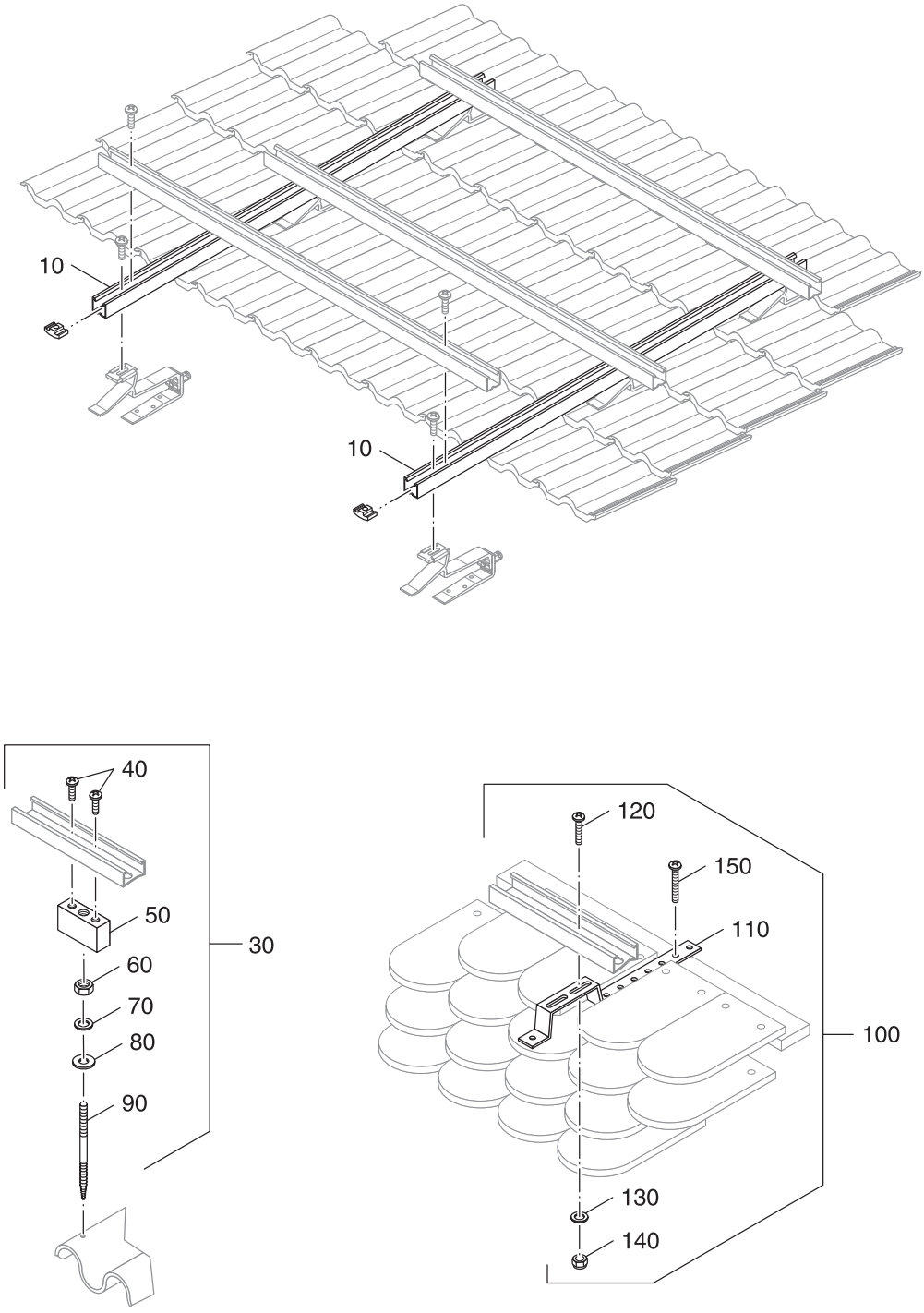

67910165-00-Slate roof mounting hardware

Item	Part Number	Description	Weight
		Mounting kits for heavy snow and wind loads	
10	63045254	High load rail vertical	5.5
		Hanger bolt kit	
30	63020003	Hanger bolt kit consists of:	0.44
40	(x)	Screw 8x16 10,9 A2 2 pieces	*
50	63020008	Attachment block M8/M12 f	0.1
60	(x)	Hex nut DIN439 M12 A2 1 piece	*
70	(x)	Washer DIN125 13 A2 1 piece	*
80	63020009	Gasket	0.02
90	63020010	Stud M12x180	0.3
		Mounting kits for Slate- and Shingle roofs	
100	63017467	Mounting-Set for Roof hooks for slate roofs consists of:	0.88
110	(x)	Roof hooks for slate roofs 1 piece	*
120	(x)	Screw M8x25 1 piece	*
130	(x)	Washer DIN125 8,4 V2A 1 piece	*
140	(x)	Hex nut DIN985 M8 A4 1 piece	*
150	(x)	Wood screw 6x70 1 piece	*

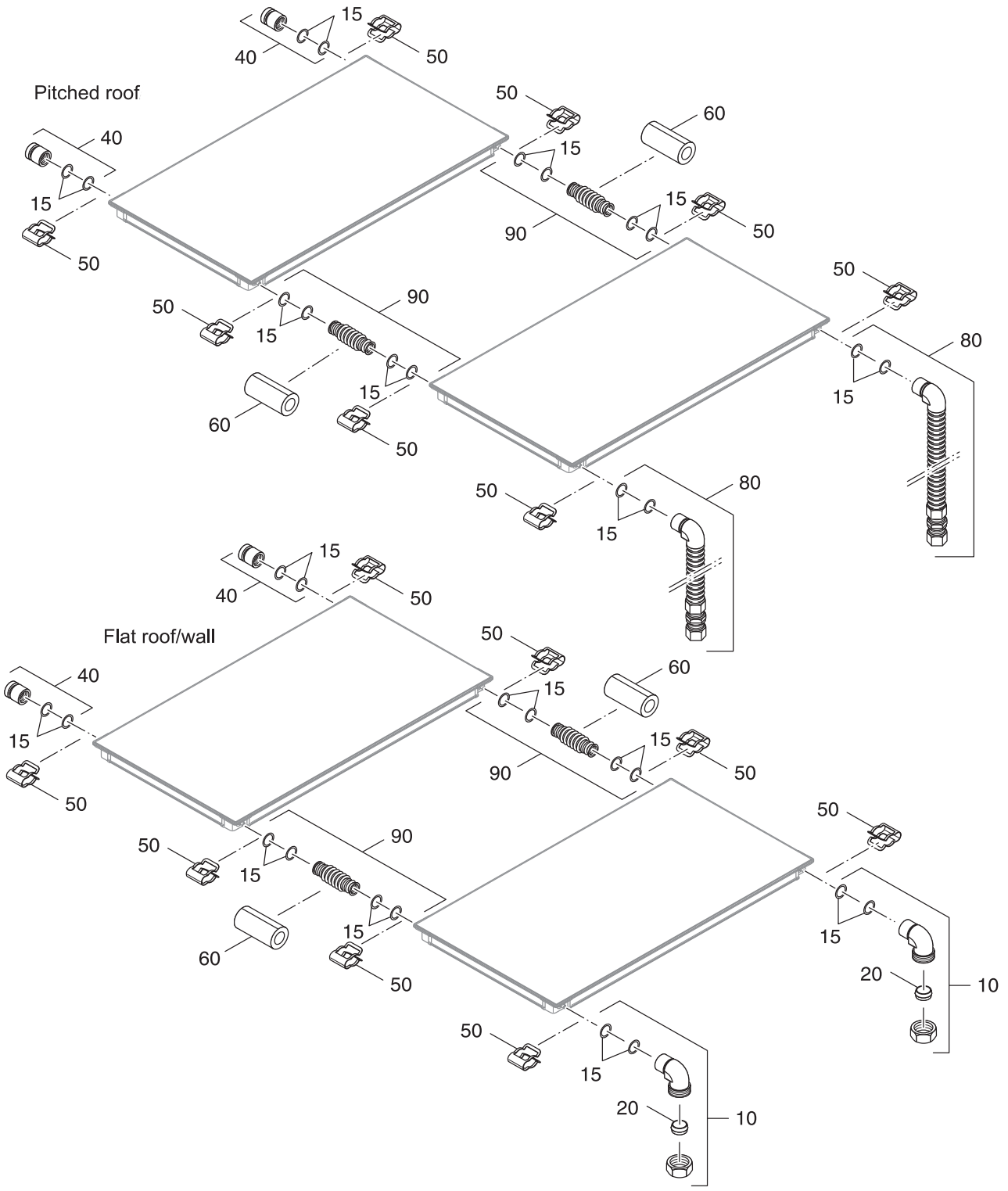

67910063-00-Connection set SKS/FKT

Item	Part Number	Description	Weight
10	87182237030	Elbow 18 Clamp G3/4 kpl	0.3
		Available individual parts:	
15	63045264	O-Ring 15x3 SHORE70 EPDM291 Set 5 pieces	0.008
20	87182237740	Compression ring 1/2" (16 mm) Set 5 pieces	0.05
20	63045250	Compression ring 3/4" (18 mm) Set 5 pieces	
40	63045256	End plug kpl	0.1
		Available individual parts:	0.1
15	63045264	O-Ring 15x3 SHORE70 EPDM291 Set 5 pieces	0.008
50	63045255	Retaining clip f. Corrugated pipes SKS/FKT Set 5 pieces	0.05
60	x	Isolation f. Corrugated connector SKS/FKT	
80	87182237050	Connecting piece VL/RL SKS/FKT kpl	2.6
		Available individual parts:	
15	63045264	O-Ring 15x3 SHORE70 EPDM291 Set 5 pieces	0.008
90	63045258	Corrugated connector SKS/FKT	0.05
		Available individual parts:	
15	63045264	O-Ring 15x3 SHORE70 EPDM291 Set 5 pieces	0.1
50	63045255	Clip SKS/FKT Set 5 pieces	0.05

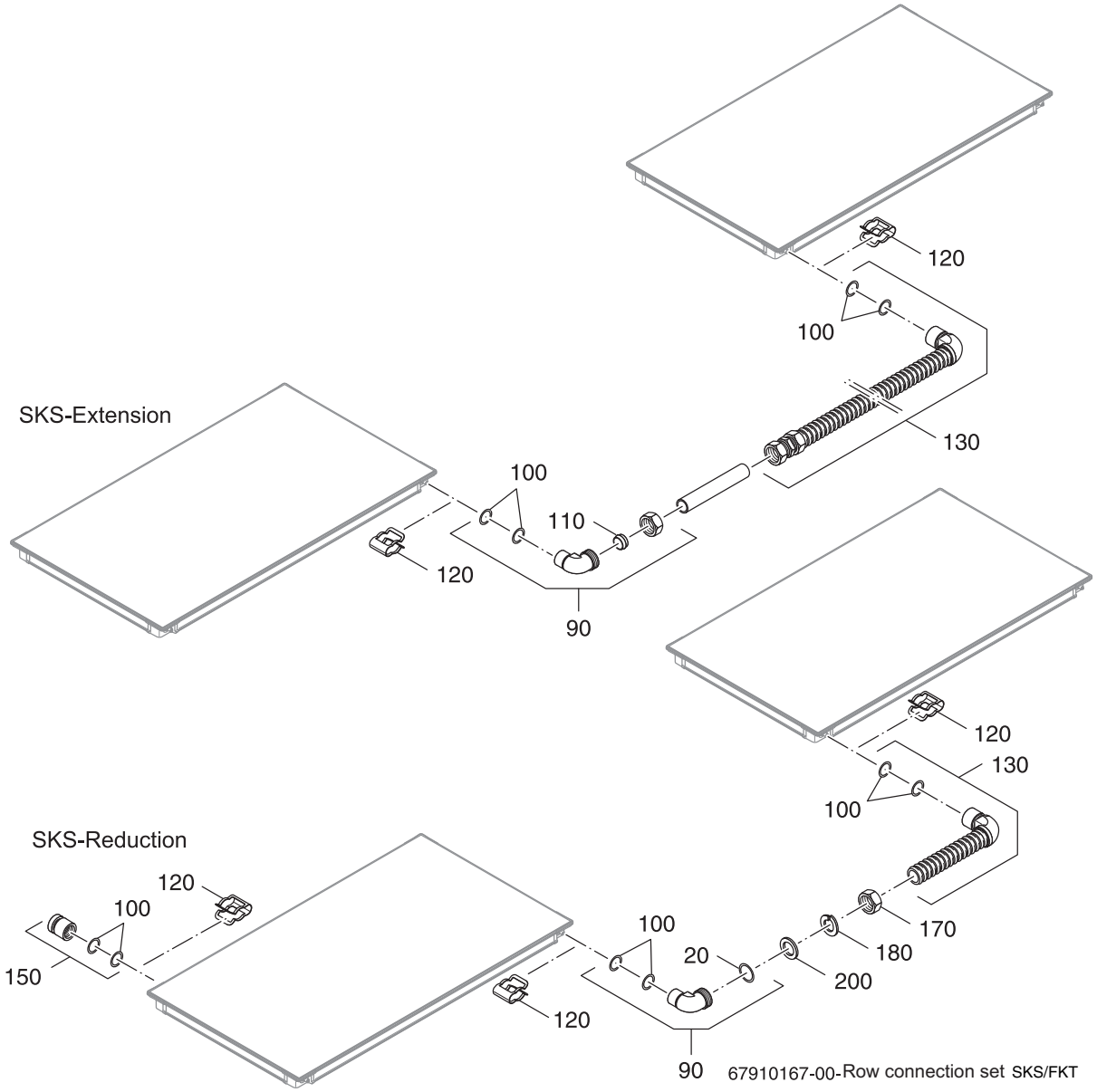

67910167-00-Row connection set SKS/FKT

Item	Part Number	Description	Weight
		Row connecting set SKS/FKT	
90	63045266	Elbow FKT/SKS 18 Clamp G3/4 kpl	0.3
		Available individual parts:	
100	63045264	O-Ring 15x3 SHORE70 EPDM291 Set 5 pieces	0.008
110	87182237740	Compression ring 1/2" (16 mm) Set 5 pieces	0.05
110	63045250	Compression ring 3/4" (18 mm) Set 5 pieces	
120	63045255	Clip FKT/SKS Set 5 pieces	0.04
130	87182237050	Connecting pipe VL/RL SKS/FKT kpl	2.46

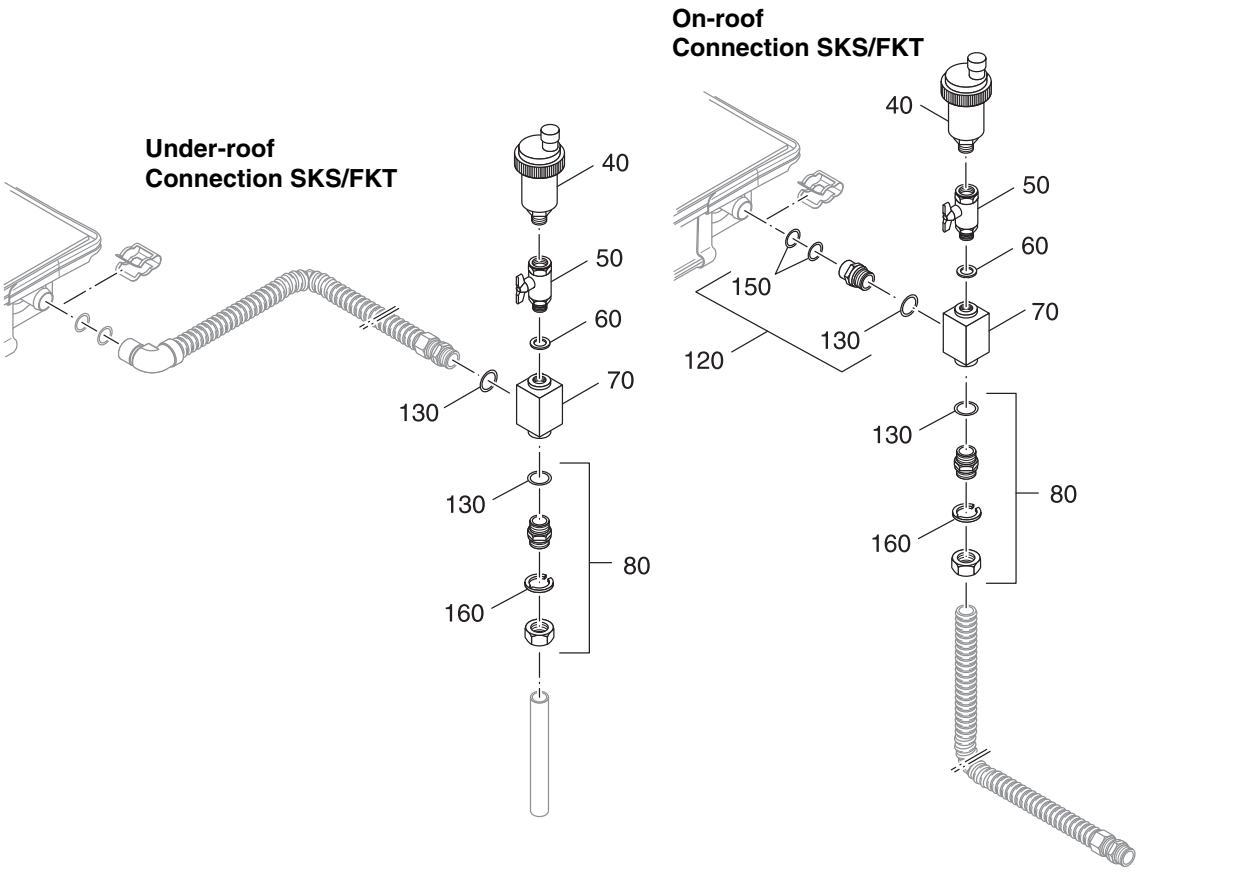

67910064-00-Air Vent Set SKN/SKS

Item	Part Number	Description	Weight
20	63045247	Hose clip DN30 Steel tape Set 5 pieces	0.19
30	85336132	Solar hose 3/4"x1000	1.54
40	63015362	Air Vent Valve autom R3/8 Solar	0.86
50	85103282	Ball valve 3/8" I/A Wing grasp	0.55
60	63012692	Cover D17x24x2 AFM34 (5x)	0.04
70	63045299	Air vent body	0.88
80	87182237060	Double nipple 18 Clamp G3/4 kpl	0.17
		Available individual parts:	
130	63045301	O-Ring 25x3,0 Shore70 Set 5 pieces	0.02
160	63020599	Compression ring DN16x1,5 Set 10 pieces	0.033
90	x	Solar hose 3/4"x55 see Pos. 30, Part accordingly cut to length	
100	87182237070	Hose clip 18 G3/4xD21 kpl	0.02
		Available individual parts:	
130	63045301	O-Ring 25x3,0 Shore70 Set 5 pieces	0.02
110	63045249	Hose clip 18 G3/4xD21 kpl	0.2
		Available individual parts:	
130	63045301	O-Ring 25x3,0 Shore70 Set 5 pieces	0.02
140	87182237740	Compression ring 1/2" (16 mm) Set 5 pieces	0.05
140	63045250	Compression ring 3/4" (18 mm) Set 5 pieces	
120	63045263	Connector SKS/FKT 18 G3/4 kpl	0.21
		Available individual parts:	
130	63045301	O-Ring 25x3,0 Shore70 Set 5 pieces	0.02
150	63045264	O-Ring 15x3 SHORE70 EPDM291 Set 5 pieces	0.01

SOLAR RATING & CERTIFICATION CORPORATION

AWARD OF COLLECTOR CERTIFICATION

The solar collector listed below has been evaluated by the Solar Rating and Certification Corporation (SRCC) in accordance with SRCC Document OG-100, *Operating Guidelines and Minimum Standards for Certifying Solar Collectors*, and has been certified by the SRCC as specified in SRCC Standard 100-94, *Test Methods and Minimum Standards for Certifying Solar Collectors*. Certification and thermal performance ratings are based on the successful durability and performance testing of a sample unit where said tests have been conducted by an independent laboratory accredited by the SRCC.

Collector Certification Number: **100-2008056B**

Certification Date:	Type: Glazed Flat-Plate	Expiration Date: 30-OCT-21
Test Laboratory: Bodycote	Report Number: 90-08-0388	Report Date: 30-OCT-09
Brand: Bosch	Certified Model: FKT-1W	Model Tested: FKT-1S

Supplier: **Bosch Thermotechnology Corp.**
50 Wentworth Ave
Londonderry,NH 03053 USA
(603) 552-1100

Description: Polyester, metal backing frame. Low Iron Solar Glass cover. Copper absorber with Bluetec. Mineral Wool side insulation and Mineral Wool back insulation. Water was the fluid for performance tests. Gross Area: 2.411 m^2 (26 ft^2). Aperture Area: 2.258 m^2 (24.3 ft^2).

GLAZED COLLECTOR THERMAL PERFORMANCE RATING

Megajoules Per Panel Per Day				Thousands of BTU Per Panel Per Day			
CATEGORY (Ti-Ta)	CLEAR DAY	MILDLY CLOUDY	CLOUDY DAY	CATEGORY (Ti-Ta)	CLEAR DAY	MILDLY CLOUDY	CLOUDY DAY
A (-5 °C)	38.1	28.7	19.4	A (-9 °F)	36.1	27.2	18.4
B (5 °C)	34.8	25.4	16.1	B (9 °F)	33.0	24.1	15.3
C (20 °C)	29.6	20.4	11.4	C (36 °F)	28.1	19.4	10.8
D (50 °C)	19.4	11.1	3.3	D (90 °F)	18.4	10.5	3.1
E (80 °C)	10.0	3.1	0.0	E (144 °F)	9.5	3.1	0.0

A- Pool Heating (Warm Climate) **B**- Pool Heating (Cool Climate) **C**- Water Heating (Warm Climate) **D**- Water Heating (Cool Climate) **E**- Air Conditioning

Efficiency Equation [NOTE: Based on gross area and (P)=Ti-Ta]				**Y INTERCEPT**	**SLOPE**
S I UNITS:	η= 0.739	-3.44070 (P)/I	-0.01336 $(P)^2/I$	0.746	-4.24 $W/m^2.°C$
I P UNITS:	η= 0.739	-0.60610 (P)/I	-0.00130 $(P)^2/I$	0.746	-0.70 $Btu/hr.ft^2.°F$

Incident Angle Modifier [(S)=1/cos0 - 1, 0°<0<=60°]

$K\alpha$ = 1	-0.10 (S)	-0.163 $(S)^2$	$K\alpha$ = 1	-0.27 (S)	Linear Fit $(S)^2$

This award of certification is subject to all terms and conditions of the program Agreement and the documents incorporated therein by reference. It must be renewed annually. Any change in collector design, materials, specifications, parts, or construction must be reported to SRCC for evaluation of continued certification.

Technical Director January 25, 2010

OG-100 SRCC COLLECTOR CERTIFICATION

Solar Rating and Certification Corporation, 1679 Clearlake Road, Cocoa, FL 32922

United States and Canada

Bosch Thermotechnology Corp.
50 Wentworth Avenue
Londonderry, NH 03053
Tel. 603-552-1100
Fax 603-584-1681
www.buderus.net
U.S.A.

Products manufactured by
Bosch Thermotechnik GmbH
Sophienstrasse 30-32
D-35576 Wetzlar
www.buderus.de

Bosch Thermotechnology Corp. reserves the right to make changes without notice due to continuing engineering and technological advances.