Installation Instructions for BRBKIT (Recess Box)

660 EFO

Part no. BRBKIT

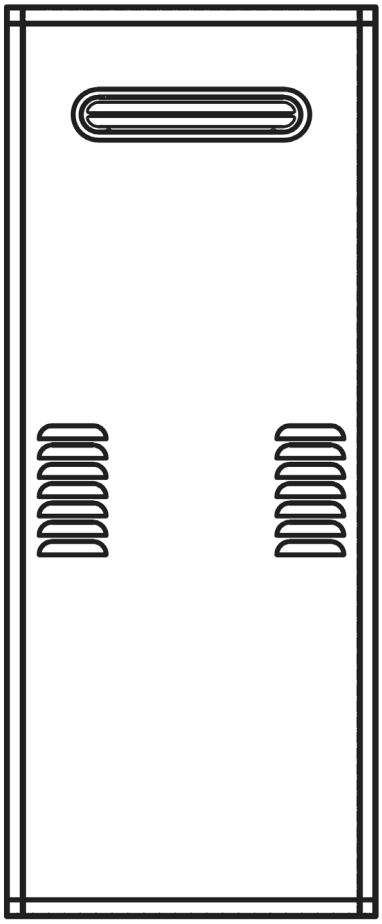

Warning: This kit must be installed by a qualified installer in accordance with these instructions and all applicable codes and requirements of the authorities having jurisdiction.

6 720 644 064 (2010/03) US/CA

BOSCH

1 Warning

Warning: This recess box has been designed to be mounted in a wall cavity. Do not attempt to mount the recess box in another configuration (i.e. outside wall, free standing, etc.). Damages resulting from an improper installation will not be covered by the Bosch Thermotechnology limited warranty.

Warning: Do not use the recess box for storage. Using the box for other than its intended use can pose a fire hazard.

Warning: The freeze prevention heaters inside the appliance will not prevent the plumbing external to the unit from freezing. Protect this plumbing with insulation, heat tape or electric heaters, solenoids, or pipe covers.

This recess box kit includes:

- Recess Box.

2 Determine the installation location

The recess box should be installed so the discharge vent maintains the minumum allowable clearances as required by the local authority. Where no local requirement exists, maintain the following minimum suggested clearances from building openings as shown in Fig. 1:

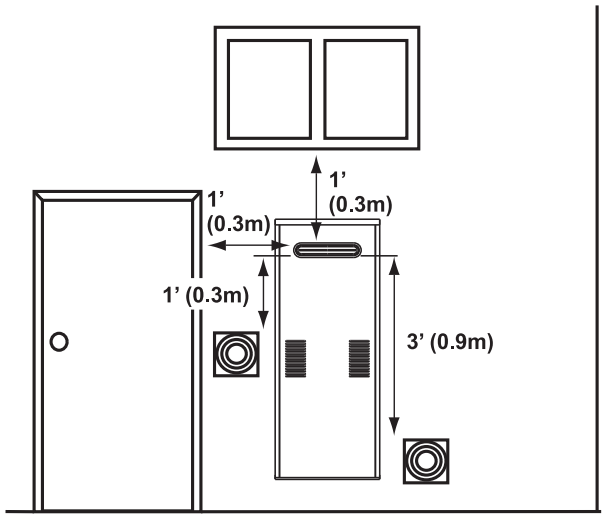

Fig. 1 Discharge Vent Clearances

1ft below, 1ft horizontally from, or 1ft above any door, operable window, or gravity air inlet into any building.
3’ above any forced air inlet within 10’

- Follow all other installation requirements as outlined in the Installation Manual.

Top, front, and side clearances noted on the front cover of the water heater are not applicable when installed in a recess box.

3 Construct the framing

- Prepare an opening for the recess box to the following approximate dimensions: 39-1/2" (height) x 14-1/4" (width) x 7-1/2" (depth).

The recess box is approved for zero clearance to combustibles.

4 Prepare the recess box

- Drill 3 holes in the recess box to accommodate the water and gas lines. Suggestions for the holes are shown in Fig. 2.

Additional holes for running the electrical and remote controller wires will be needed as well.

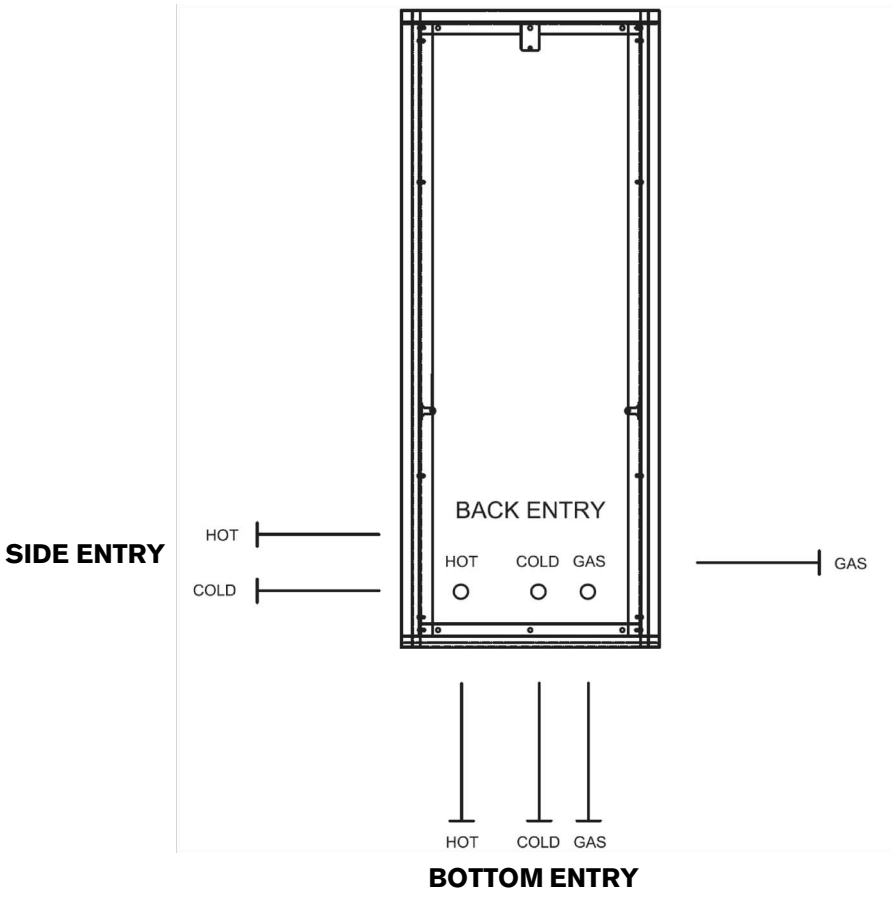

Fig. 2 Piping options

Allow for drainage from the pressure relief valve.

5 Install the recess box

- Attach the recess box to the framing using suitable screws on all 4 sides of the box.

6 Install the heater

- First, install one of the supplied mounting screws in the top recess box bracket leaving about 1/4” clearance between the bracket and screw.
- Second, insert the water heater into the box by sliding the top heater bracket over the previously installed mounitng screw as shown in Fig. 3.

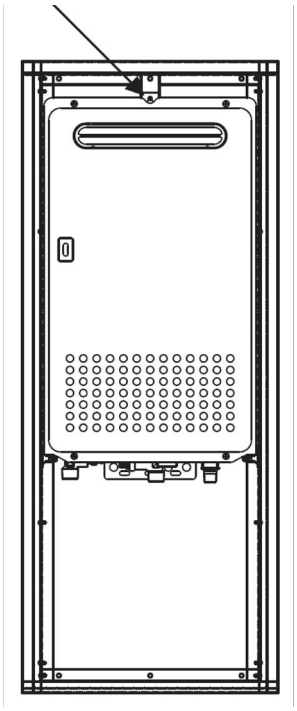

Fig. 3 Location of top mounting bracket

- Finally, install the 2 remaining mounting screws in the lower recess box brackets and tighten all 3 screws to secure the heater (see Fig. 4).

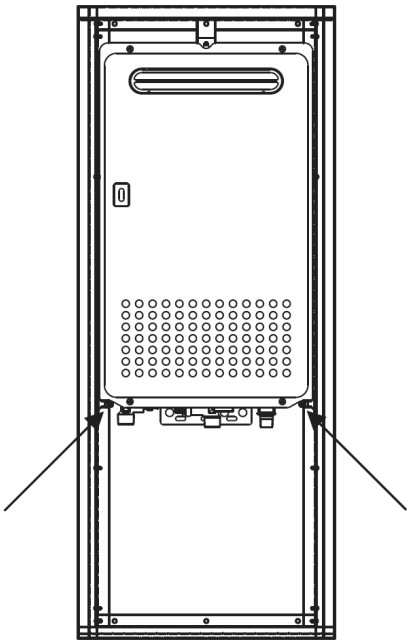

Fig. 4 Location of lower mounting bracket

7 Make connections

- Connect water, gas, and electrical connections as outlined in the Installation Manual.

8 Seal the Recess Box

- Using silicone, seal around the outer edges of the box as well as around any penetrations made to prevent water leakage.

The lower, inner edges of the box have been pre-sealed. If these seals are damaged, reseal them using silicone.

9 Replace the Recess Box Cover

- After confirming the heater is operating correctly, replace the front cover of the recess box as shown in Fig. 5.

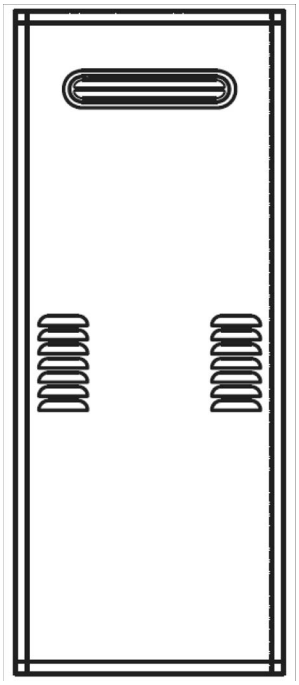

Fig. 5 Completed installation

BOSCH THERMOTECHNOLOGY CORPORATION

50 Wentworth Avenue
Londonderry, NH 03053
Tel. 866-330-2730
www.boschpro.com

Bosch Termotecnologia, S.A.
Estrada de Cacia
3801 - 856 Aveiro - PORTUGAL

Recycled paper

© 2010 Bosch Thermotechnology Corp., Londonderry, NH