Installation Instructions for BPCKIT (Pipe Cover)

660 EF/EFO

Part no. BPCKIT

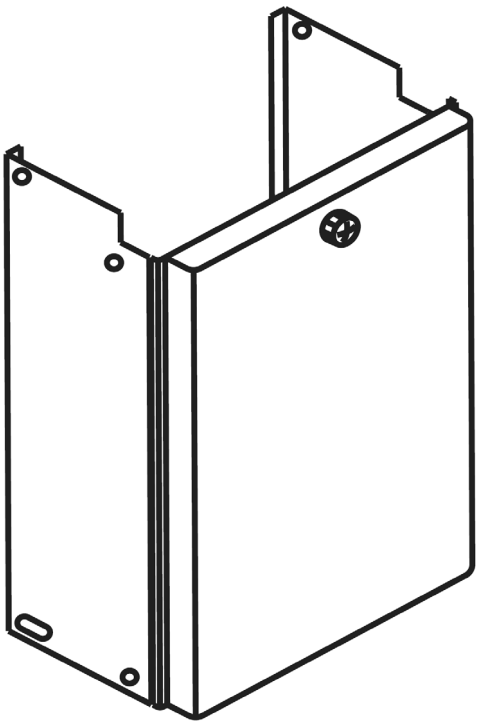

Warning: This kit must be installed by a qualified installer in accordance with these instructions and all applicable codes and requirements of the authorities having jurisdiction.

6 720 644 760 (2010/03) US/CA

BOSCH

1 Installation

This pipe cover kit includes:

Part No.	Part	Q'ty	Part No.	Part	Q'ty
①	Side cover (left/right)	1 each	⑥	Panel screw	2
②	Pipe front cover	1	⑦	Truss screw small	2
③	Pipe cover top	1	⑧	Tapping screw with PW	6
④	Pipe cover bottom front	1	⑨	Phillips head screw	2
⑤	Pipe cover bottom rear	1	⑩	Wall anchor	2

Refer to the illustration below for installing the pipe covers.

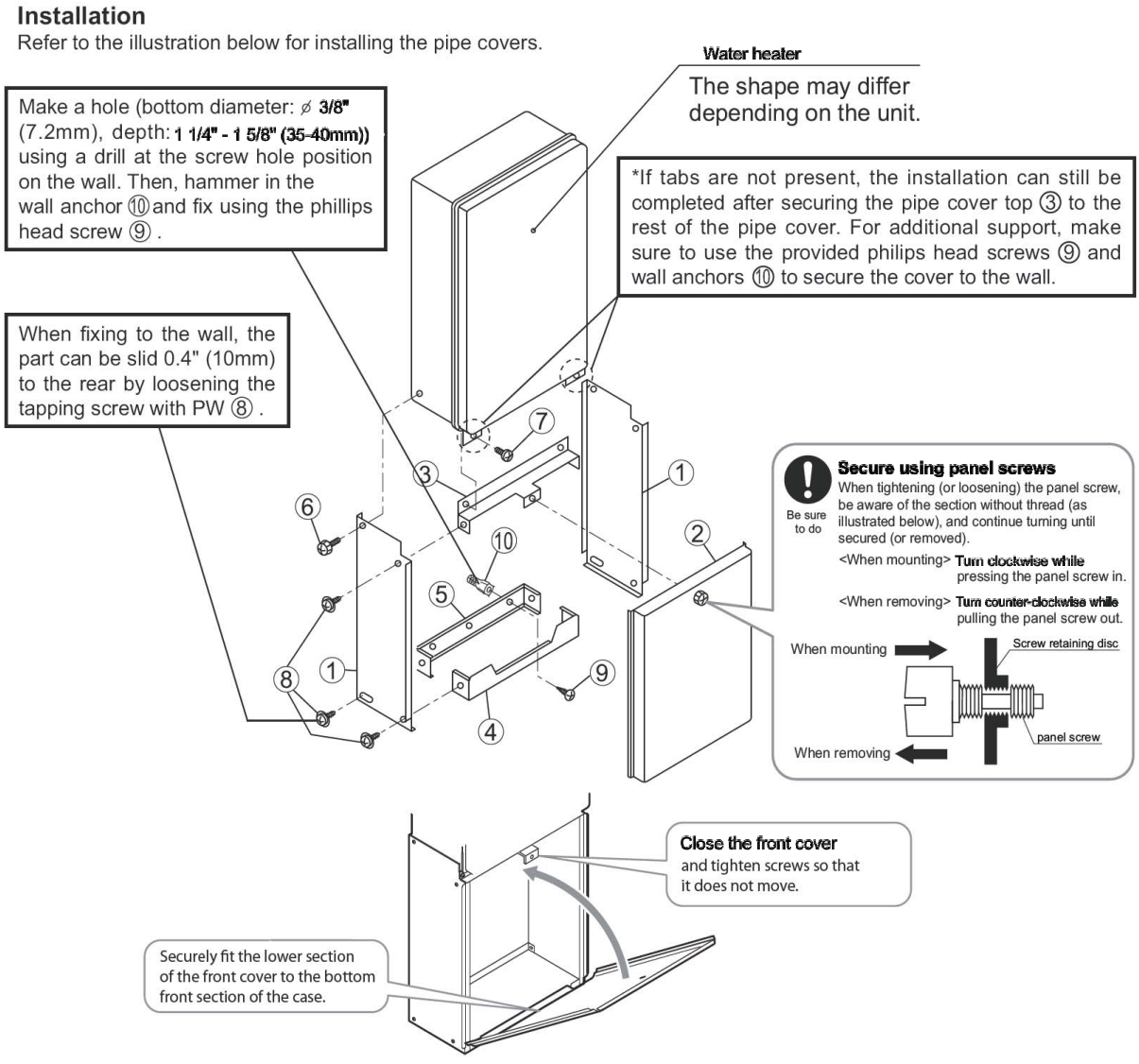

BOSCH THERMOTECHNOLOGY CORPORATION
50 Wentworth Avenue
Londonderry, NH 03053
Tel. 866-330-2730
www.boschpro.com

Bosch Termotecnologia, SA
Estrada de Cacia
3801 - 856 Aveiro - PORTUGAL

Recycled paper

© 2010 Bosch Thermotechnology Corp., Londonderry, NH