Installation Instructions
Gas conversion kits

For models: 660 EF/EFO

Part no. 660NGKIT/660LPKIT

Warning: This kit must be installed by a qualified installer in accordance with these instructions and all applicable codes and requirements of the authorities having jurisdiction.

6 720 644 786 (2010/04) US/CA

BOSCH

1 Gas Type Conversion

For models: 660 EF/ 660 EFO only

LP AND NG ARE EXTREMELY FLAMMABLE SO TAKE EXTRA PRECAUTIONS WHEN PERFORMING ANY WORK TO THE HEATER.

PROCEDURE MUST BE PERFORMED BY A LICENSED GAS TECHNICIAN.

Included Parts

The following parts are supplied in the conversion kit. Check for any missing items before starting the conversion.

- Manifold Plate (#1)
- O- Ring (#2)
- New Inlet and Manifold Pressure Rating Sticker (#1)
- Date, Gas Type, Kit Number, Name of Company Sticker (#1).

A. Preparation

▶ 1. Tools needed:
  – Bosch Remote Controller
  – Manometer (capable of displaying digits in tenths (i.e. 2.4) and up to 20" W.C.)
  – Philips screwdriver (#2 recommended)
  – Gas leak detector

Do not attempt to perform a conversion without access to a manometer and a Bosch remote controller.
A digital manometer is recommended.

B. Parts Replacement

▶ 1. If the display on the remote controller is on, turn off the unit by pressing the "ON/OFF" button on the remote controller.

▶ 2. Disconnect the electrical power to heater by disconnecting the electrical plug from the outlet or shutting off the breaker providing power to the unit.

▶ 3. Turn off the gas supply to the water heater by closing the gas shut-off valve.

▶ 4. Remove the front cover of the unit by removing the 4 screws holding it to the case.

▶ 5. Remove the manifold plate by locating and removing the 7 screws as indicated in Fig. 1. Discard the original manifold plate.

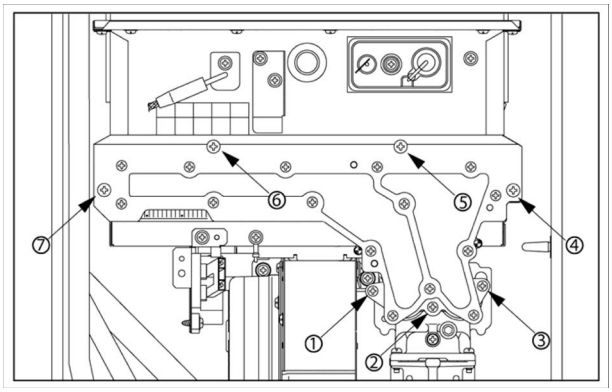

Fig. 1

▶ 6. Locate the 2 black O-Rings on the gas valve as indicated in Fig. 2. If torn or damaged, remove and replace these O-rings with the 2 new O-Rings supplied in the conversion kit. Discard the old O- Rings.

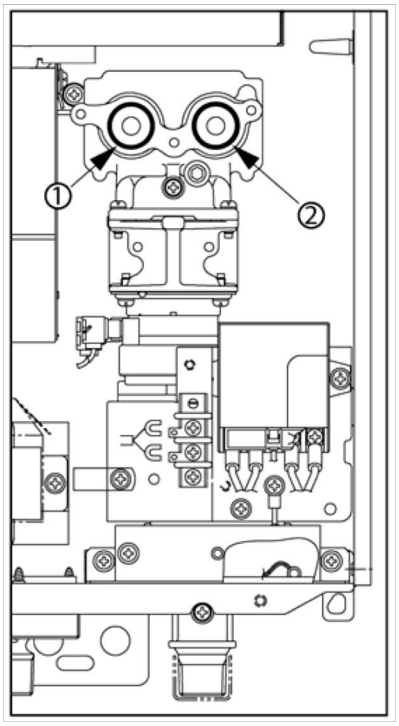

Fig. 2

- 7. Insert the new manifold plate supplied with the conversion kit. The orifice size of the gas manifold plate should be marked as follows (Fig. 3)
  - To fire Natural Gas (NG) – 2.2
  - To fire Propane Gas (LPG) – 1.5

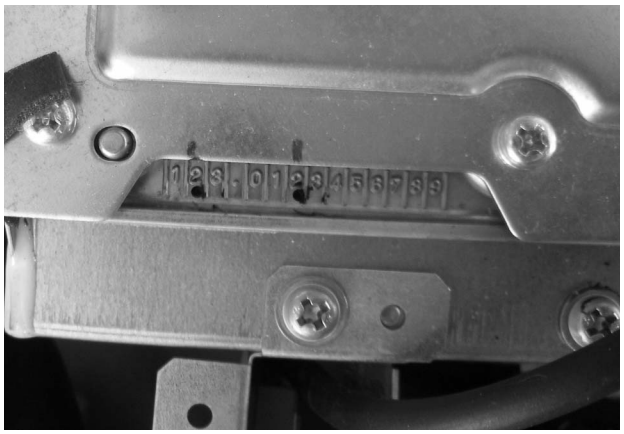

Fig. 3 Manifold plate for 660 EF/EFO Natural Gas

Warning:
DO NOT continue with conversion if manifold plate is incorrect.

- 8. Make sure that O- Rings are secured properly in place. Failure to do so will cause gas leaks, possibly resulting in severe personal injury or death.
- 9. Secure the new manifold plate to the unit using the screws removed in step 5. The screws need only to be hand tightened and should not be tightened using a drill. First, insert screws 1-3 from Figure 2, but do not fully tighten these screws. Insert and fully tighten screws 4-7. Then proceed to completely tighten screws 1-3.

When tightening the screws, be certain to not apply excess force as the screws should turn easily. If extra force is required, stop, remove the screw and tighten by hand first. Excess force can strip out the original holes.

- 10. Before replacing the front cover, the unit must be adjusted and tested as described in the next section.

2 Adjustments and testing

A. Adjustments

- 1.Before electrical power is applied to the unit, install a remote controller to the unit if it is not already installed.
- 2.Reconnect the electrical power to the unit.
- 3.Within the first ten minutes of connecting electrical power to the unit, but before pressing the Power ON/OFF button (display should be blank) hold the up button on the remote controller until the display blinks “99”.
  This will put the unit into Maintenance Writer mode. If pressing the up button does not put the unit into Maintenance Writer mode, make sure the remote display is blank, unplug the unit for sixty seconds, and try again.
- 4.After accessing the Maintenance Writer mode, use the “up” and “down” buttons to change the Maintenance Writer item number display. Pressing the “FLOW METER ALARM SET” button for 0.5 seconds will change the item number setting from ON to OFF. If the Priority lamp is flashing when an item number is displayed, this indicates an “ON” setting for that item number, and if the Priority lamp is off, the item number is “OFF”.
- 5.Change “FC” and “FE” from OFF to ON. The priority light should be flashing on both item numbers after pressing the “FLOW METER ALARM SET”.
- 6.Choose the proper conversion setting from the chart below and set the “A1” Maintenance Writer item number according to the chart.

Warning:
DO NOT change the other item numbers. This will cause a fault in the water heater.

Model	Desired Gas Type	A1
660 EF/EFO	Natural Gas	ON
660 EF/EFO	Propane	OFF

Table 1

- ON: “Priority” light is flashing
- OFF: “Priority” light is off.

- 7.After setting the “A1” item number for the desired gas type, press and hold the “up” and “down” buttons together for five seconds to confirm the new settings. The remote controller will emit a tone and the display will go blank when the settings are confirmed.
  If this is not done, the unit will not put the setting changes into effect.

The setting changes can be cancelled by pressing the Power ON/OFF button before confirming the settings, or if the unit is left alone for ten minutes without confirming the settings. If the default setting needs to be changed again, disconnect the electrical power to the unit, reconnect it and repeat this procedure.

B. Testing

- 1.Before turning on the gas supply to the unit, verify that the gas supply pressure is within the following operating ranges:
  a. Natural Gas Supply: Min. 4 – Max. 10.5 inches W.C.
  b. Propane Supply: Min. 8 – Max. 14 inches W.C.

If the supply pressure is higher that the maximum allowable pressure, adjust the pressure at the regulator or install a secondary regulator on the supply line connected to the water heater. DO NOT attempt to operate heater if the gas supply pressure is not within the ranges specified above. High supply pressure can damage the unit and possibly cause a gas leak.

- 2.Next, verify the supply pressure at the unit. To check the gas supply pressure to the unit, a tap is provided on the gas inlet (Fig. 4).
  Make sure the gas supply is turned off to the unit. Remove the hex head Philips screw from the tap. A 9/32” nut driver is recommended for the removal of this screw. If a nut driver is not available, a Philips screwdriver can be used. Gently remove the screw, so as not to strip out the screw.

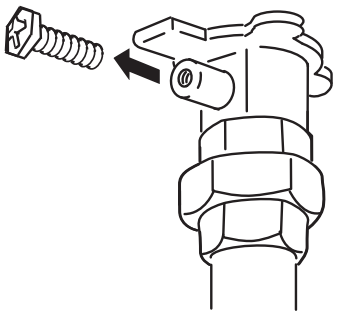

Fig. 4

- 3.Connect a manometer to the tap by using a silicone tube. Turn on the gas supply to unit and confirm the supply pressure.

- 4.After supply pressure to heater has been confirmed, turn off the gas supply, remove the manometer tube and replace the hex head screw.
- 5.The manifold pressure will also have to be checked using a manometer (digital manometer is suggested). In order to check the gas manifold pressure, two taps are provided on the gas valve inside the unit (Fig. 5). The pressure can checked either by removing the hex head Philips screw and connecting a manometer with a silicon tube, or by removing the 1/8" NPT screw with an Allen wrench and connecting the appropriate pressure gauge. Be sure to zero out the manometer before attaching it to the tap.

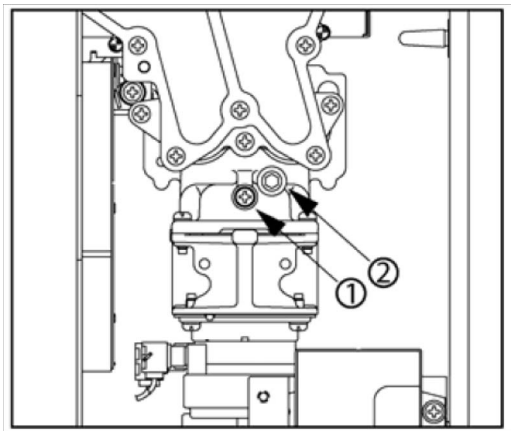

Fig. 5

- 6.Turn on the gas supply to the unit.
- 7.Before firing the unit, check for gas leaks at the gas inlet fitting and around the manifold plate using a gas leak detector.
- 8.If not already on, press the Power "ON/ OFF" button so that the unit is in standby mode. The priority light should be on.
- 9.Open up several hot water fixtures (high flow rate is required through the unit) and allow the unit to go through its startup sequence. It may take several ignition attempts in order to purge air from the gas chambers. If an "11" code appears on the remote controller, reset the unit by pressing the Power button on the remote controller off and then on again.
- 10.Once the heater has ignited and has begun to run continuously, locate the manifold adjustment buttons on the right side of the circuit board (Fig. 6).

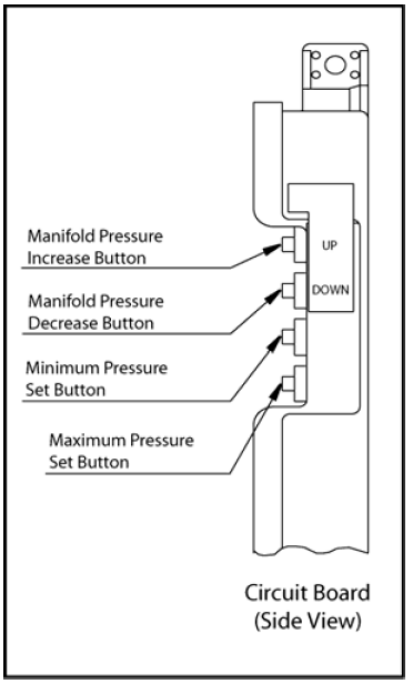

Fig. 6

- 11.Press and hold the maximum pressure set button. Verify from the table on the following page that the appropriate pressure is read from the manometer. Use values from Cover Off. If the pressure needs adjustments, use the manifold pressure increase and decrease buttons to adjust to the correct pressure, while continuing to hold down the maximum pressure set button.
- 12.Press and hold the minimum pressure set button. Verify from the table on the following page that the appropriate pressure is read from the mano meter. Use values for Cover Off. If the pressure needs adjustment, use the manifold pressure increase and decrease buttons to adjust to the correct pressure, while continuing to hold down the minimum pressure set button.

Model Name	Gas Type	Supply Pressure (inch H2O)	Manifold Pressure (inch H2O) Cover Off	
			Max value	Min value
660 EF	NGA	7.9	2.77	0.88
	LPG	11	3.46	1.09
660 EFO	NGA	7.9	2.77	0.84
	LPG	11	3.46	1.09

Table 2

- 13.After the manifold pressures have been confirmed, verify that the flame is a steady blue color using the inspection window (Fig. 7).

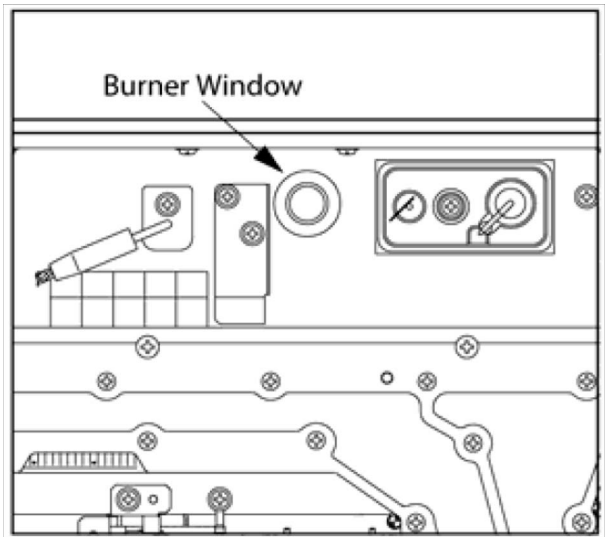

Fig. 7

- 14.Turn off the water and the gas to the unit. Replace the screw from the manifold tap and turn on the gas supply to the unit.
- 15.Perform a final gas leak check around the entire manifold plate, especially where the O-Rings are seated against the plate using a gas leak detector.
- 16.If the remote controller needs to be removed, disconnect electrical power to heater and proceed to remove controller connections.

C. Apply conversion labels

- 1.Replace the front cover of the unit using the 4 screws previously removed.
- 2.Locate the 2 conversion stickers supplied in the conversion kit.
- 3.Place the sticker indicating the new inlet and manifold pressures directly above the rating sticker so as not to cover any existing markings as indicated by “A” in Fig. 8.

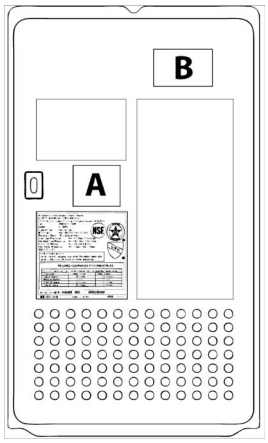

Fig. 8 660 EF appliances stickers

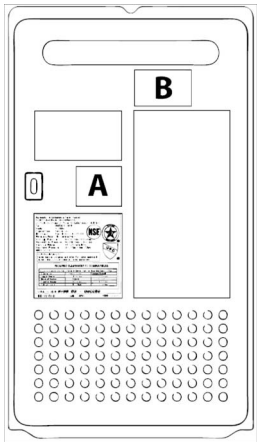

Fig. 9 660 EFO appliances stickers

- 4.Fill out the required information on the remaining sticker indicating the date, gas type, kit number, and name of the company performing the conversion. Place this sticker on the front cover as indicated by “B” in Fig. 8 and 9 (unit depending). Do not cover any existing markings.

3 Installation Checklist

Parts Replacement

- Remove existing manifold plate and O-Rings. Discard these parts.
- Replace with new manifold plate and O-Rings.
- Make sure that manifold plate and O-Rings are securely in place.

Adjustments

- Access Maintenance Writer mode and set A1 and A2 item numbers to desired gas type.
- Confirm gas type settings.

Testing

- Before opening gas valve to heater, verify that gas supply pressure is within operating range of heater.
- If gas supply pressure is not within specification, adjust the pressure at the regulator or install a secondary regulator on the supply line connected to the water heater.
- Remove hex Philips screw from inlet of Bosch heater and confirm gas supply pressure at unit with manometer. Replace screw after confirmation of gas supply pressure.
- Remove hex Philips screw or 1/8" NPT screw from gas valve and connect manometer to gas valve.
- Check for gas leaks around gas inlet fitting and manifold plate using a gas leak detector.
- Check and confirm correct manifold pressures. Make adjustments if necessary. Replace screw after manifold pressures have been confirmed.
- Perform final gas leak check again with gas leak detector.

Apply Conversion Labels

- Place New Inlet and Manifold Pressure Rating Sticker above rating sticker on front cover.
- Fill out information on Date, Gas Type, Kit Number, Name of Company Sticker and place on front cover.

BOSCH THERMOTECHNOLOGY CORPORATION

50 Wentworth Avenue
Londonderry, NH 03053
Tel. 866-330-2730
www.boschpro.com

Bosch Termotecnologia, SA
Estrada de Cacia
3801 - 856 Aveiro - PORTUGAL

Recycled paper

© 2010 Bosch Thermotechnology Corp., Londonderry, NH