Installation Instructions for the Professional

Flat Plate Collectors

Rack Mounting

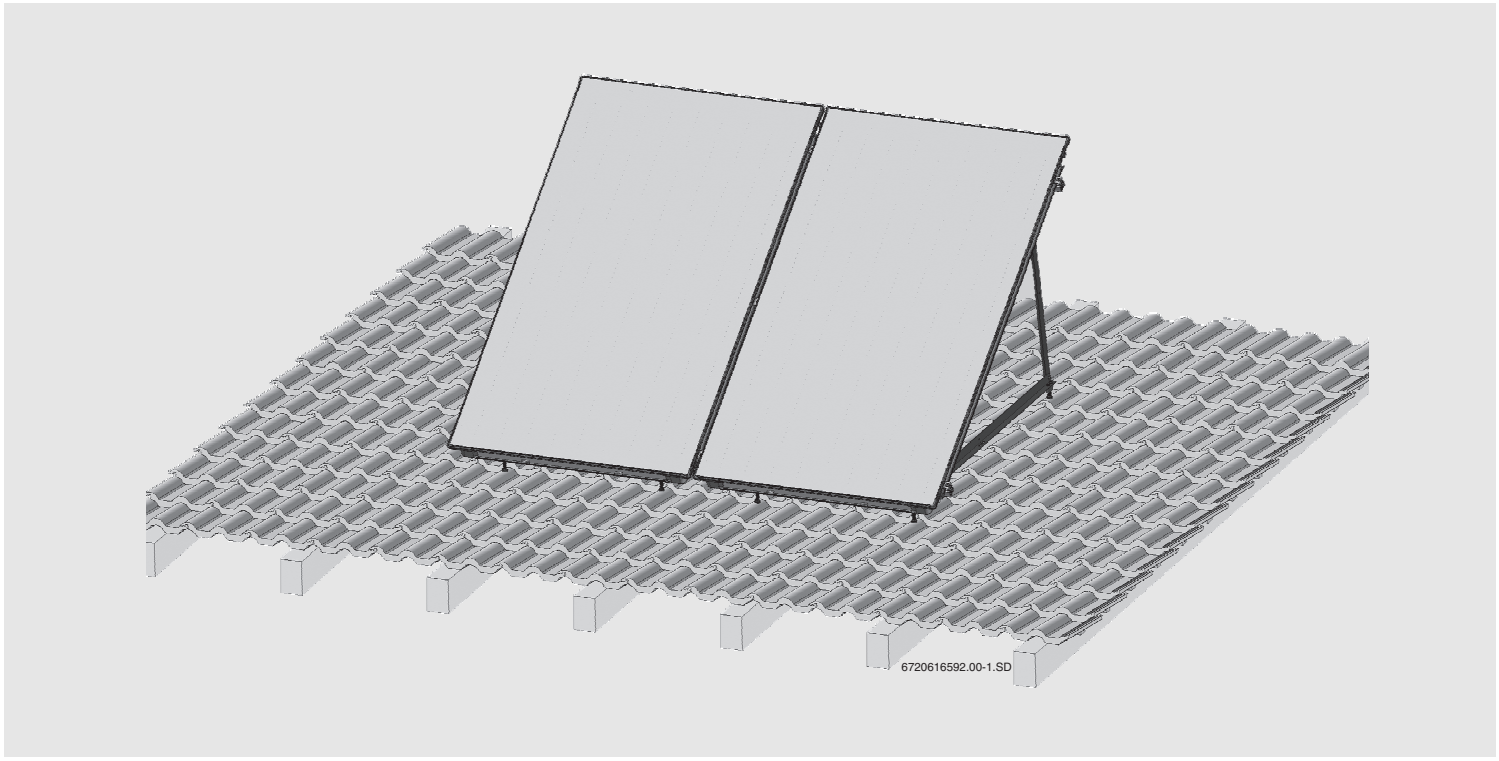

6 720 645 390 (2010/06) US/CA

Contents

1	**Safety instructions**	**3**
1.1	General safety instructions	3
1.2	Explanation of symbols	3
2	**Before the installation**	**4**
2.1	Distances between the triangles	4
2.1.1	Portrait collectors	4
2.1.2	Landscape collectors	4
2.2	Scope of delivery	5
2.3	Scope of delivery for higher loads (Portrait collectors)	6
2.4	Required tools	7
2.5	Slope of the collectors	7
2.6	Determining space requirements	8
2.6.1	Minimum distance for multi-row collector arrays	8
2.6.2	Space requirements and collector array alignment	8
3	**Making the roof connection**	**10**
3.1	Roof tiles	10
3.2	Flat shingle	10
3.3	Corrugated sheet/metal roof	10
3.4	Asphalt, slate and composite shingles	10
3.5	Standing seam metal roof	10
3.6	Flat roof	10
3.6.1	Flat roof (Portrait): occurring forces per connection point for design of the substructure	10
3.6.2	Flat roof (Landscape): occurring forces per connection point for design of the substructure	10
4	**Installing the rack**	**11**
4.1	Pre-installing triangles on the ground	11
4.2	Installing triangles on the roof	11
4.2.1	Installation of hanger bolts	11
4.2.2	Installation of roof hooks (asphalt/slate/ composite shingles)	11
4.2.3	Installation on a substructure (flat roof)	12
4.3	Installing the profile rails and collector brackets	13
4.4	Installing steel cables as bracing for Portrait collectors	14
4.5	Routing the cable	15
4.6	Tightening screws	15
4.7	Installing collectors	15

1 Safety instructions

1.1 General safety instructions

About these instructions

These instructions describe the installation of flat plate solar thermal collectors on racks for flat and sloped roofs. They are a supplement to the on-roof installation instructions.

These accessory instructions and the on-roof instructions contain important information for safe and professional installation and are directed at the trained professional.

The Portrait installation is shown. Instructions for Landscape collectors are identical unless stated otherwise.

- ▶ Read through the instructions carefully and keep them in a safe place.
- ▶ Follow the instructions and specifications for on-roof installation.
- ▶ Always follow the safety instructions to prevent injury and property damage.

Standards and guidelines

- ▶ Observe all country-specific standards and guidelines for installation. It is the installer's responsibility to ensure all national and local codes are met.

Designated use

- ▶ Only install on stable roofs that have the needed load capacity. Here you must take into account the additional roof load including collectors and if necessary consult a structural engineer.
- ▶ Only install the installation kit on roofs with an incline of 0 - 36 ° (12/9 pitch) or negative 0 - 15° (12/3 pitch), see Fig. 10 for details.
- ▶ The installation kit is suitable for a max. standard snow load of 42 lbs/ft^2 (2.0 kN/m^2) and an installation height of max. 66 ft (20 m). With appropriate accessories, higher loads and building heights are acceptable.
- ▶ If there is a risk that larger amounts of snow might collect behind the collectors (toward the roof's ridge), prevent such accumulations by attaching a suitable protective grille.
- ▶ Do not change the rack construction (e.g. by drilling additional holes). Exception: shorten the braces to adjust the slope.
- ▶ The rack is intended only for the attachment of collectors. Do not attach any other equipment (e.g. antennas).

1.2 Explanation of symbols



Warnings in the text are indicated by a warning triangle and a gray background.

Signal words are used to indicate the level of risk if counter measures are not taken.

- **Caution** indicates that minor damage to property may occur.
- **Warning** indicates that minor personal injury or severe property damage may occur.
- **Danger** means that severe personal injury may occur. Very serious cases may result in death.



Notices are identified in the text by this symbol. They are separated by horizontal lines above and below the text.

Notes contain important information in cases where there is no risk to the user or the appliance.

2 Before the installation

2.1 Distances between the triangles

2.1.1 Portrait collectors

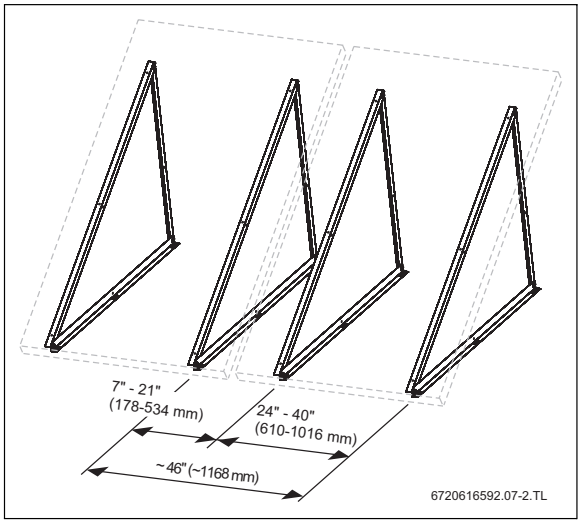

Fig. 1 Basic and extension installation kit

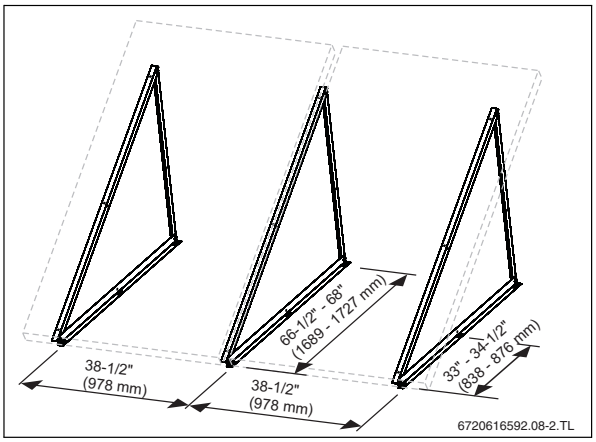

Fig. 2 Basic installation kit and additional supports for higher wind and snow loads (for 2 collectors)

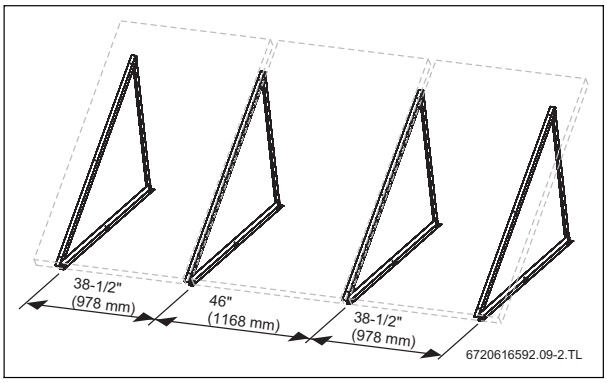

Fig. 3 Basic and extension kit (for more than 2 collectors)

2.1.2 Landscape collectors

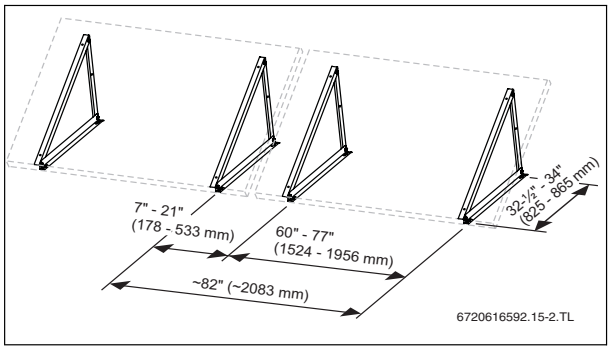

Fig. 4 Basic and extension installation kit

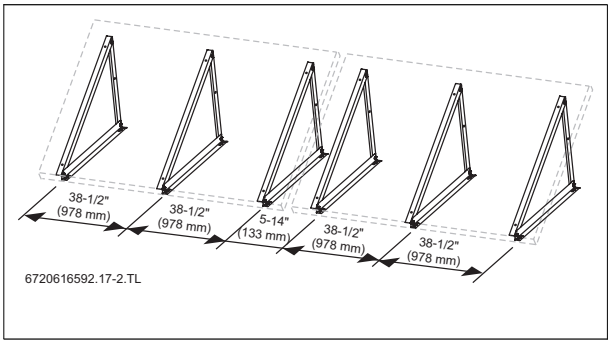

Fig. 5 Basic and extension installation kit and additional supports for higher wind and snow loads

2.2 Scope of delivery

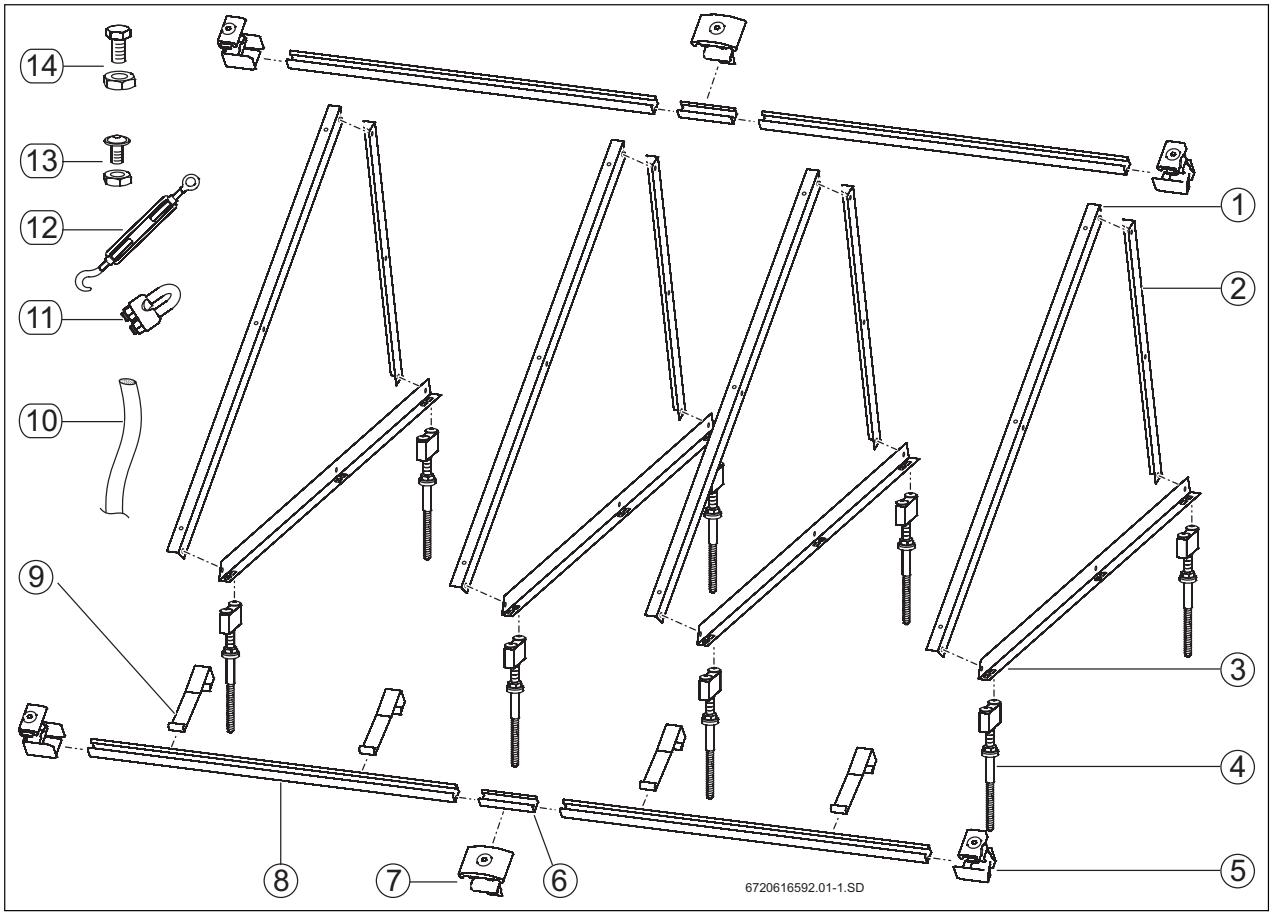

Fig. 6 Fastening materials for 2 Portrait collectors on e.g. shingle or slate roofs consisting of rack (basic and extension), collector installation (basic and extension), roof attachment (per collector)

Rack - basic installation kit:		
1	Collector rail	2 x
2	Rear rail	2 x
3	Lower rail	2 x
10	Wire 134" (3400 mm) (only for Portrait)	1 x
11	Cable clamp (only for Portrait)	2 x
12	Turnbuckle (only for Portrait)	1 x
13	Screw M8 x 20 and nuts	7 x[1)]
14	Screw M10 x 20 and nuts	6 x

Rack - extension installation kit:		
1	Collector rail	2 x
2	Rear brace	2 x
3	Lower rail	2 x
13	Screw M8 x 20 and nuts	4 x
14	Screw M10 x 20 and nuts	6 x

Collector connection - basic installation kit:		
5	Single-sided collector clamp	4 x
8	Profile rail	2 x
9	Collector hanger	2 x
13	Screw M8 x 20	4 x

Collector connection - extension installation kit:		
6	Profile connector with threaded pins	2 x
7	Double-sided collector clamp	2 x
8	Profile rail	2 x
9	Collector hanger	2 x
13	Screw M8 x 20	4 x

Roof jack (per collector):		
4	e.g. with carriage bolts	4 x

Tab. 1 Basic installation kit = per collector array and for 1st collector / extension installation kit = for each additional collector

1) for Landscape collectors: 4 x

2.3 Scope of delivery for higher loads (Portrait collectors)

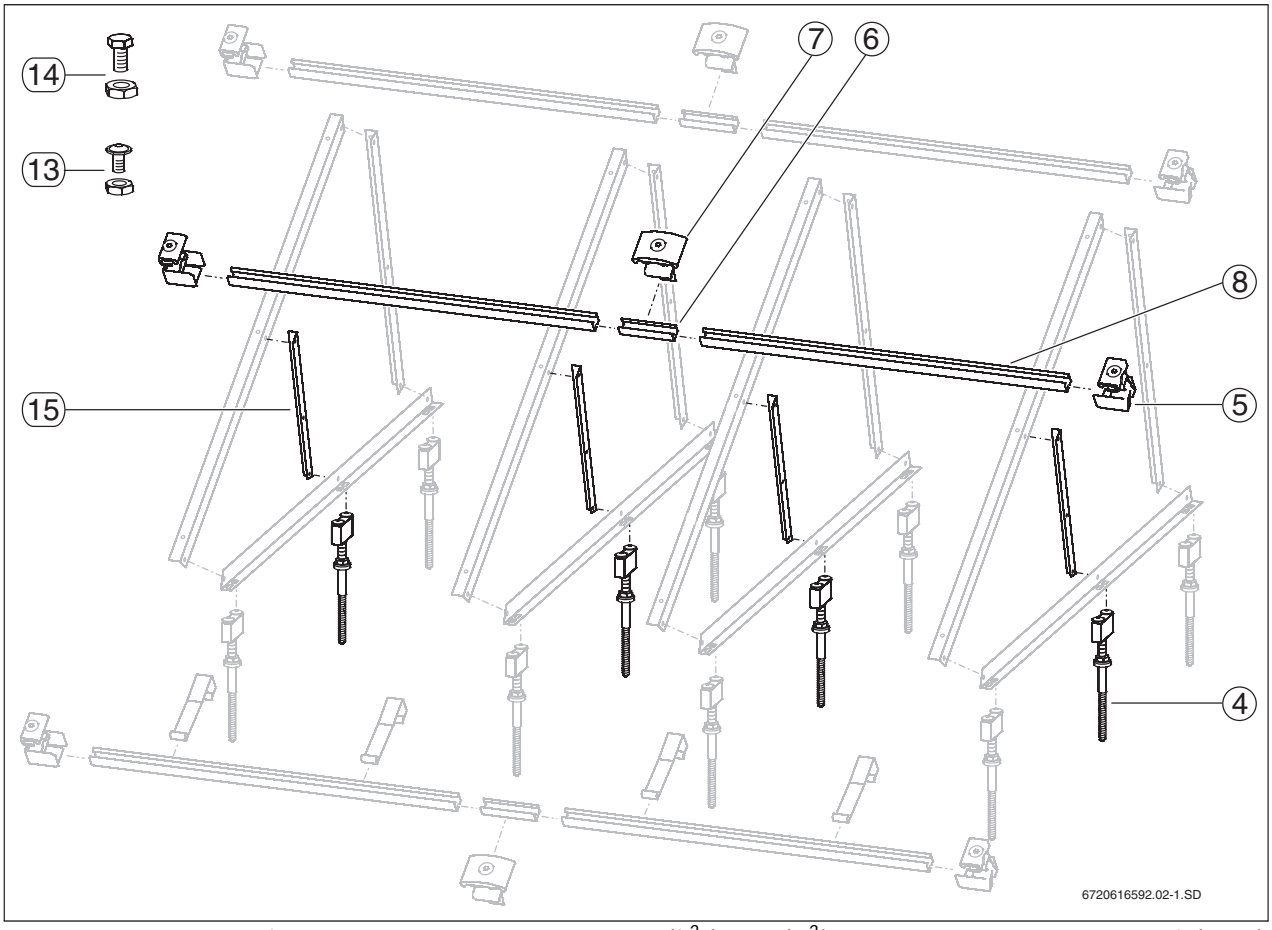

Fig. 7 Additional parts for higher loads: snow load up to 65 lbs/ft^2 (3.1 kN/m^2), installation height up to max. 66 ft (20 m) (here: connection with carriage bolts)

Additional brace for rack, per collector:		
15	Center rail	2 x
13	Screw M8 x 20 and nuts	2 x
14	Screw M10 x 20 and nuts	2 x

Collector connection additional, basic installation kit:		
5	Single-sided collector clamp	2 x
8	Profile rail	1 x
	M8 nut	2 x
	Screw M8 x 25	2 x

Collector connection expanded, installation kit:		
6	Profile connector with threaded pins	1 x
7	Double-sided collector clamp	1 x
8	Profile rail	1 x
	M8 nut	2 x
	Screw M8 x 25	2 x

Roof jack (per collector):		
4	e.g. with hanger bolts	2 x

Tab. 2 Basic installation kit = per collector array and for 1st collector / extension installation kit = for each additional collector

2.4 Required tools

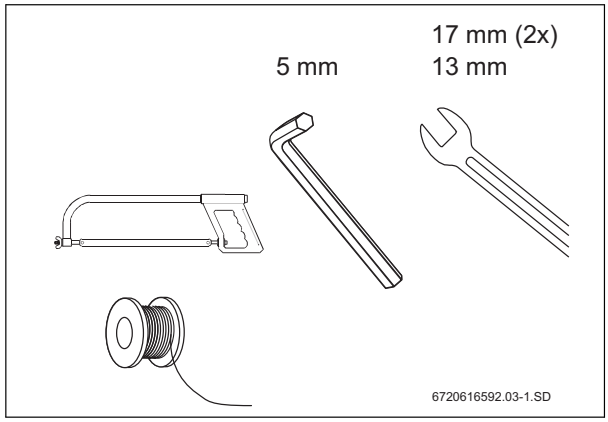

Fig. 8

2.5 Slope of the collectors

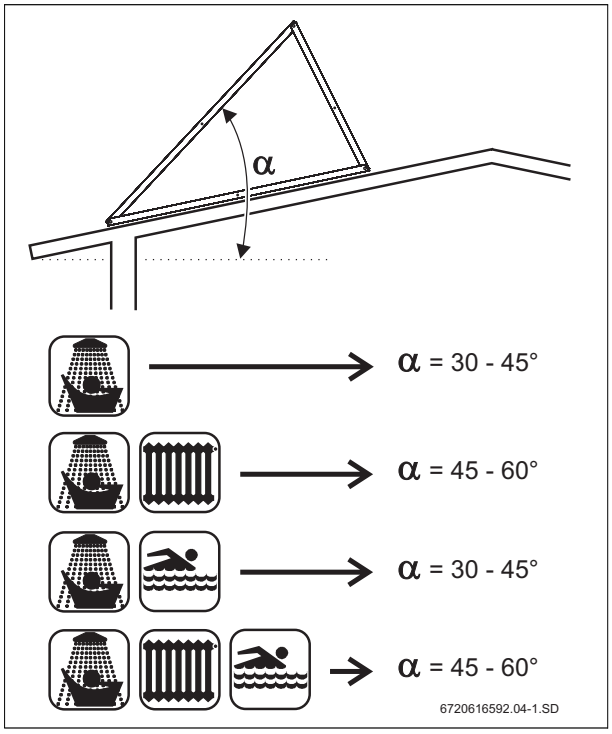

Fig. 9 Determining the area of application and slope

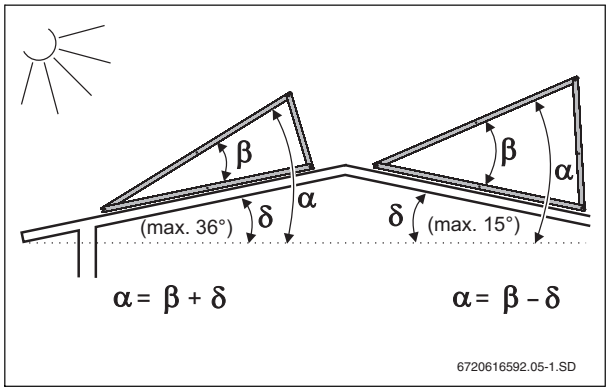

Fig. 10 Angles for sloped roofs

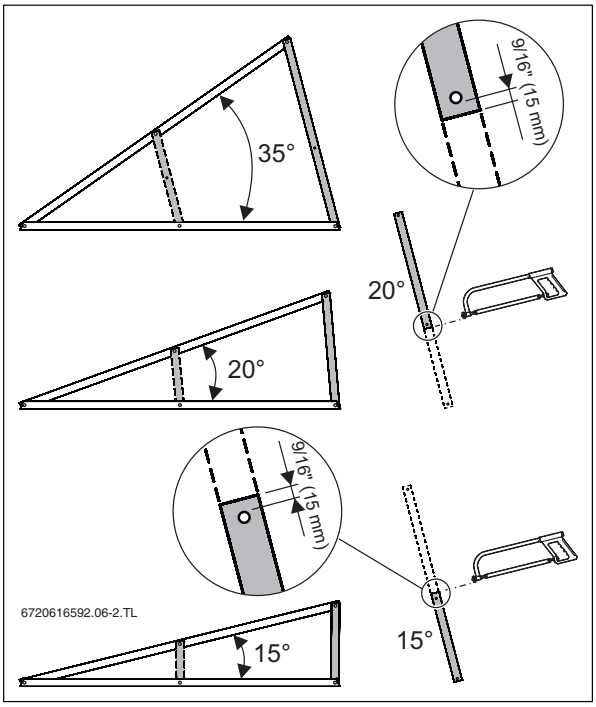

Fig. 11 Adjust rear rails; install additional rails (dashed) for angle 15° or 20° (rail uncut = 35° angle)

2.6 Determining space requirements

2.6.1 Minimum distance for multi-row collector arrays

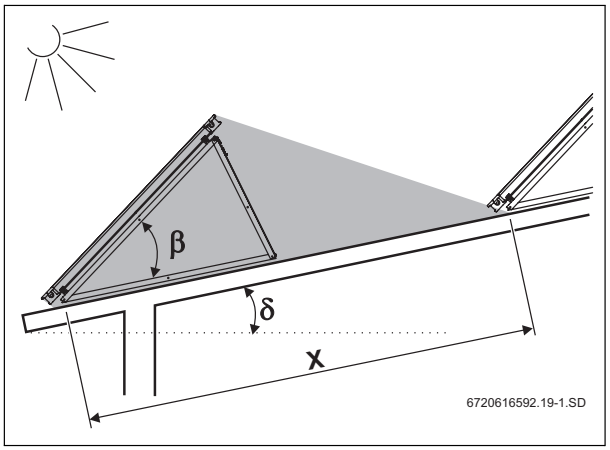

Fig. 12 Shadowing for multi-row collector arrays

δ	Dimension X for Portrait collectors β = 15°	β = 20°	β = 35°
0°	125" (3175 mm)	135" (3429 mm)	156" (3962 mm)
5°	116" (2946 mm)	124" (3150 mm)	139" (3531 mm)
10°	109" (2769 mm)	115" (2921 mm)	126" (3200 mm)
15°	104" (2642 mm)	108" (2743 mm)	115" (2921 mm)
20°	99" (2515 mm)	102" (2591 mm)	107" (2718 mm)
25°	95" (2413 mm)	97" (2464 mm)	99" (2515 mm)
30°	91" (2311 mm)	93" (2362 mm)	93" (2362 mm)
35°	88" (2235 mm)	89" (2261 mm)	87" (2210 mm)

Tab. 3 Minimum distance for Portrait collectors

δ	Dimension X for Landscape collectors β = 15°	β = 20°	β = 35°
0°	75" (1905 mm)	78" (1981 mm)	88" (2235 mm)
5°	68" (1727 mm)	71" (1803 mm)	78" (1981 mm)
10°	63" (1600 mm)	65" (1651 mm)	70" (1778 mm)
15°	60" (1524 mm)	61" (1549 mm)	64" (1626 mm)
20°	56" (1422 mm)	57" (1448 mm)	59" (1499 mm)
25°	53" (1346 mm)	54" (1372 mm)	54" (1372 mm)
30°	51" (1295 mm)	51" (1295 mm)	50" (1270 mm)
35°	49" (1245 mm)	49" (1245 mm)	47" (1194 mm)

Tab. 4 Minimum distance for Landscape collectors

2.6.2 Space requirements and collector array alignment

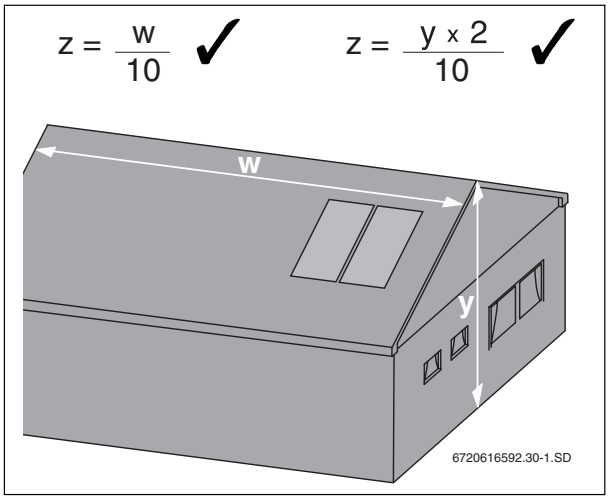

Fig. 13 Formulas for calculating the minimum distance from the edge (see Fig. 14 and 15)

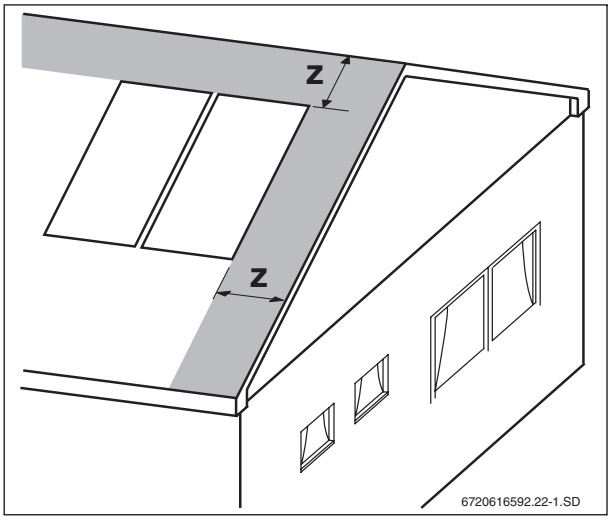

Fig. 14 Minimum distance from the edge area on sloped roofs

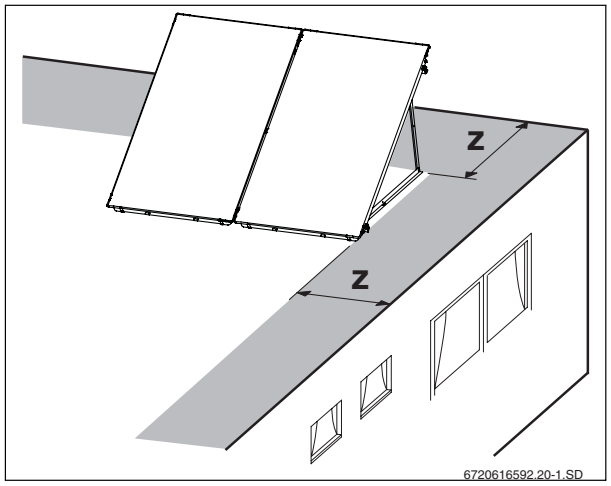

Fig. 15 Minimum distance from the edge on flat roofs

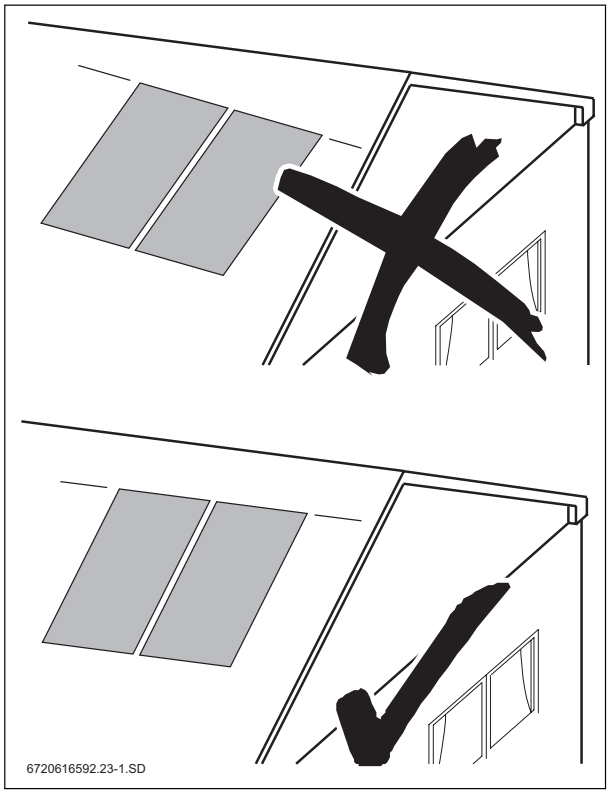

Fig. 16 Alignment of the collector array

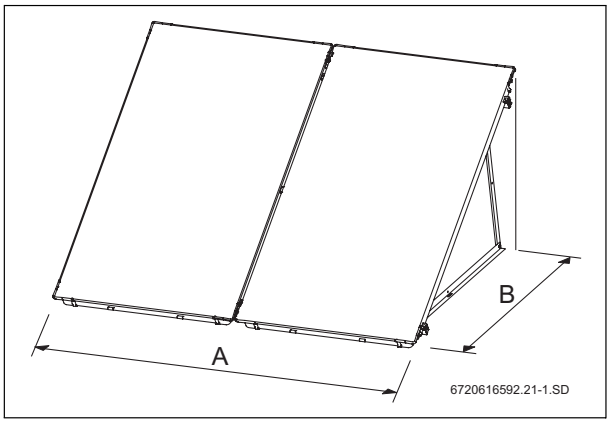

Fig. 17 Space requirement of a collector array

Portrait collectors:	
Number of collectors	**Dimension A**
2	93" (2362 mm)
3	139" (3531 mm)
4	185" (4699 mm)
5	231" (5867 mm)
6	277" (7036 mm)
7	323" (8204 mm)
8	369" (9373 mm)
9	415" (10541 mm)
10	461" (11709 mm)

Landscape collectors:	
Number of collectors	**Dimension A**
2	165" (4191 mm)
3	248" (6299 mm)
4	330" (8382 mm)
5	413" (10490 mm)
6	496" (12598 mm)
7	578" (14681 mm)
8	661" (16789 mm)
9	744" (18898 mm)
10	826" (20980 mm)

Tab. 5 Space requirement (array width)

Portrait collectors:	
Angle of inclination	**Dimension B**
15°	80" (2032 mm)
20°	78" (1981 mm)
35°	78" (1981 mm)

Landscape collectors:	
Angle of inclination	**Dimension B**
15°	45" (1143 mm)
20°	44" (1118 mm)
35°	44" (1118 mm)

Tab. 6 Space requirements (array depth)

3 Making the roof connection

For dimensions of the roof racks (holes of the rails) see page 4.

3.1 Roof tiles

Make the connection with the building substructure using hanger bolts.
(see 4.2.1 Installation of hanger bolts).

3.2 Flat shingle

Make the connection with the building substructure using roof hooks (see 4.2.2 Installation of roof hooks (asphalt/slate/composite shingles)).

3.3 Corrugated sheet/metal roof

Make the connection with the building substructure using hanger bolts (see 4.2.1 Installation of hanger bolts).

3.4 Asphalt, slate and composite shingles

Make the connection with the building substructure using roof hooks (see installation of roof hooks, asphalt/slate/composite shingles).

3.5 Standing seam metal roof

Purchase special roof hooks for standing seam metal roofs.

3.6 Flat roof

The roof connection for flat roof installation must be made on the building side (e.g. on I-beam, Fig. 21). The idea is to not penetrate the roof membrane.

Warning: The roof can be damaged.

- Consider the load rating of the roof and substructure.

Warning: The solar system can be damaged.

- Design the building-side roof connection so that wind forces that occur on the collectors are within acceptable limits (see Tab. 7 and 8).

3.6.1 Flat roof (Portrait): occurring forces per connection point for design of the substructure

Angle of the rack	Up to 42 lbs/ft² (2.0 kN/m²) basic area snow load			Up to 65 lbs/ft² (3.1 kN/m²) basic area snow load		
	Push[1)]	Pressure[2)]	Pull[2)]	Push[1)]	Pressure[2)]	Pull[2)]
15°	149 lbf (0.66 kN)	675 lbf (3.00 kN)	-560 lbf (-2.49 kN)	99 lbf (0.44 kN)	970 lbf (4.31 kN)	-576 lbf (-2.56 kN)
20°	198 lbf (0.88 kN)	664 lbf (2.95 kN)	-563 lbf (-2.50 kN)	133 lbf (0.59 kN)	936 lbf (4.16 kN)	-578 lbf (-2.57 kN)
35°	331 lbf (1.47 kN)	565 lbf (2.51 kN)	-567 lbf (-2.52 kN)	221 lbf (0.98 kN)	693 lbf (3.08 kN)	-590 lbf (-2.62 kN)

Tab. 7 for: roof angle 0° / maximum wind speed 94 mph (151 km/h) / installation height 66 ft (20 m)

1) parallel to the roof
2) perpendicular to the roof

3.6.2 Flat roof (Landscape): occurring forces per connection point for design of the substructure

Angle of the rack	Up to 42 lbs/ft² (2.0 kN/m²) basic area snow load			Up to 65 lbs/ft² (3.1 kN/m²) basic area snow load		
	Push[1)]	Pressure[2)]	Pull[2)]	Push[1)]	Pressure[2)]	Pull[2)]
15°	92 lbf (0.41 kN)	385 lbf (1.71 kN)	-347 lbf (-1.54 kN)	90 lbf (0.40 kN)	668 lbf (2.97 kN)	-344 lbf (-1.53 kN)
20°	122 lbf (0.54 kN)	376 lbf (1.67 kN)	-349 lbf (-1.55 kN)	119 lbf (0.53 kN)	650 lbf (2.89 kN)	-347 lbf (-1.54 kN)
35°	203 lbf (0.90 kN)	317 lbf (1.46 kN)	-353 lbf (-1.57 kN)	200 lbf (0.89 kN)	556 lbf (2.47 kN)	-349 lbf (-1.55 kN)

Tab. 8 for: roof angle 0° / maximum wind speed 94 mph (151 km/h) / installation height 66 ft (20 m)

1) parallel to the roof
2) perpendicular to the roof

4 Installing the rack

4.1 Pre-installing triangles on the ground

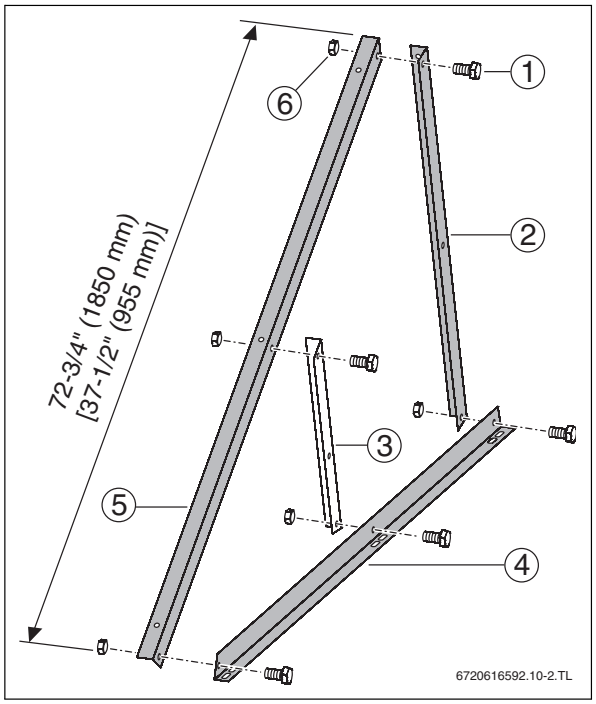

Fig. 18 Assemble rails (dimension in brackets = Landscape collectors)

1 M10 screws
2 Rear rail
3 Center rail (accessory, for higher loads)
4 Lower brace
5 Collector rail
6 M10 nut

Roof hooks must be attached to the building substructure. Sheathing alone will not support the load of the solar collectors. Minimum 2x6 framing required to attach the roof hooks to. Follow the local building code and use best practice methods.

4.2 Installing triangles on the roof

4.2.1 Installation of hanger bolts

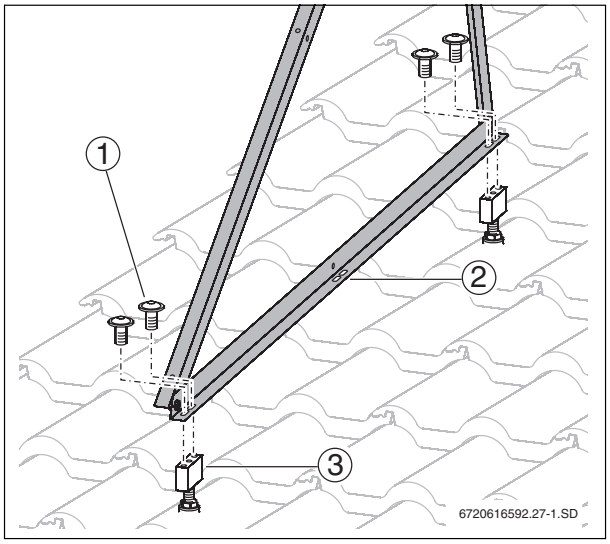

Fig. 19 Roof connection with hanger bolts (here: on a roof with tiles)

1 M8 x 20 screw
2 Position of additional roof connection for higher loads
3 Hanger bolt installation set

4.2.2 Installation of roof hooks (asphalt/slate/composite shingles)

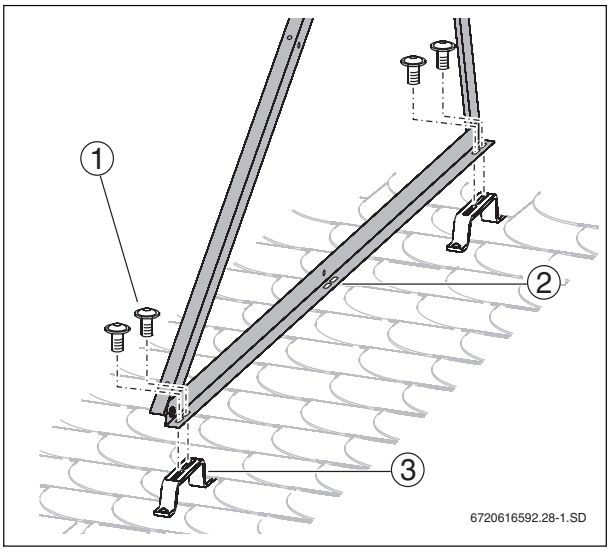

Fig. 20 Roof connection with roof hooks (here: on roof with asphalt/slate/composite shingles)

1 M8 x 20 screw
2 Position of additional roof connection for higher loads
3 Roof hook

4.2.3 Installation on a substructure (flat roof)

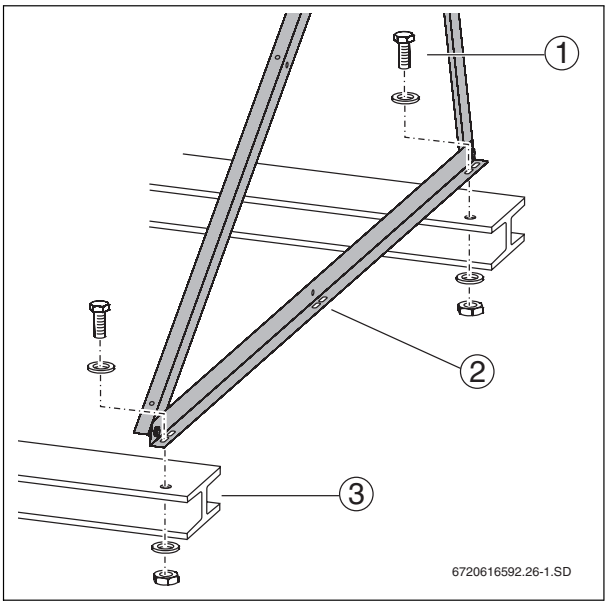

Fig. 21 Installation, e.g. on I-beams (provided on-site)

1 Required screw: at least M8/8.8
2 Position of additional I-beam for higher loads
3 I-beam provided on-site

4.3 Installing the profile rails and collector brackets

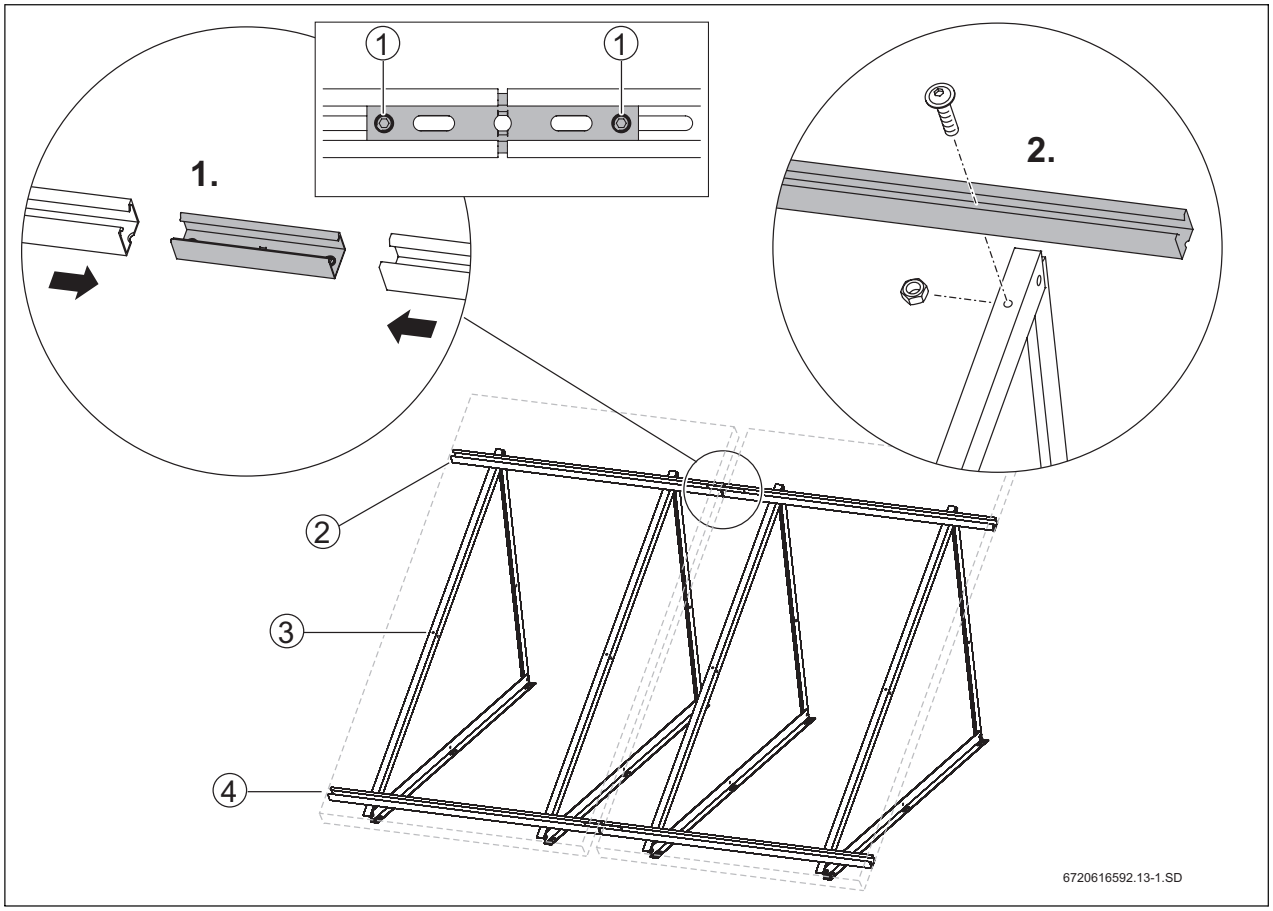

Fig. 22 Installing profile rails on triangles

1 Tighten M10 set screw to adjust
2 Upper profile rails
3 Position of additional profile rails for higher loads
4 Lower profile rails

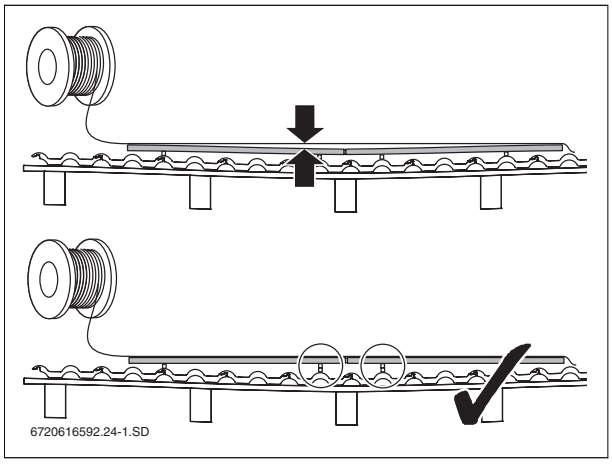

Fig. 23 If profile rails are bent, install spacers (check e.g. with cord)

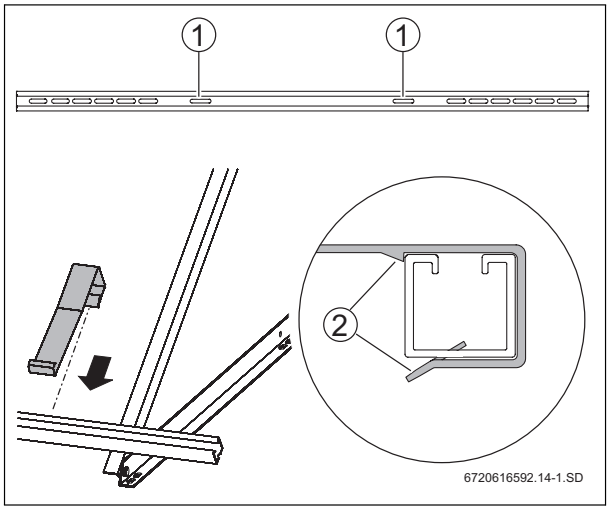

Fig. 24 Install two collector hangers per collector on lower profile rails

1 Slots for collector hangers
2 Snap the collector hangers into place

4.4 Installing steel cables as bracing for Portrait collectors

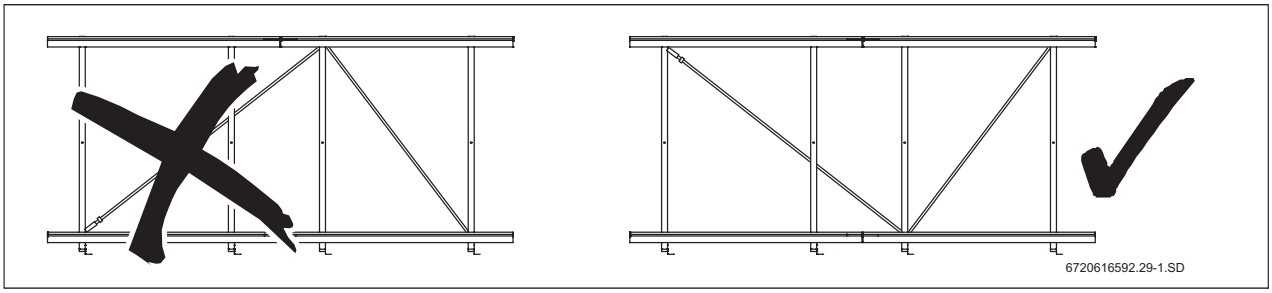

Fig. 25 Proper installation of the steel cable

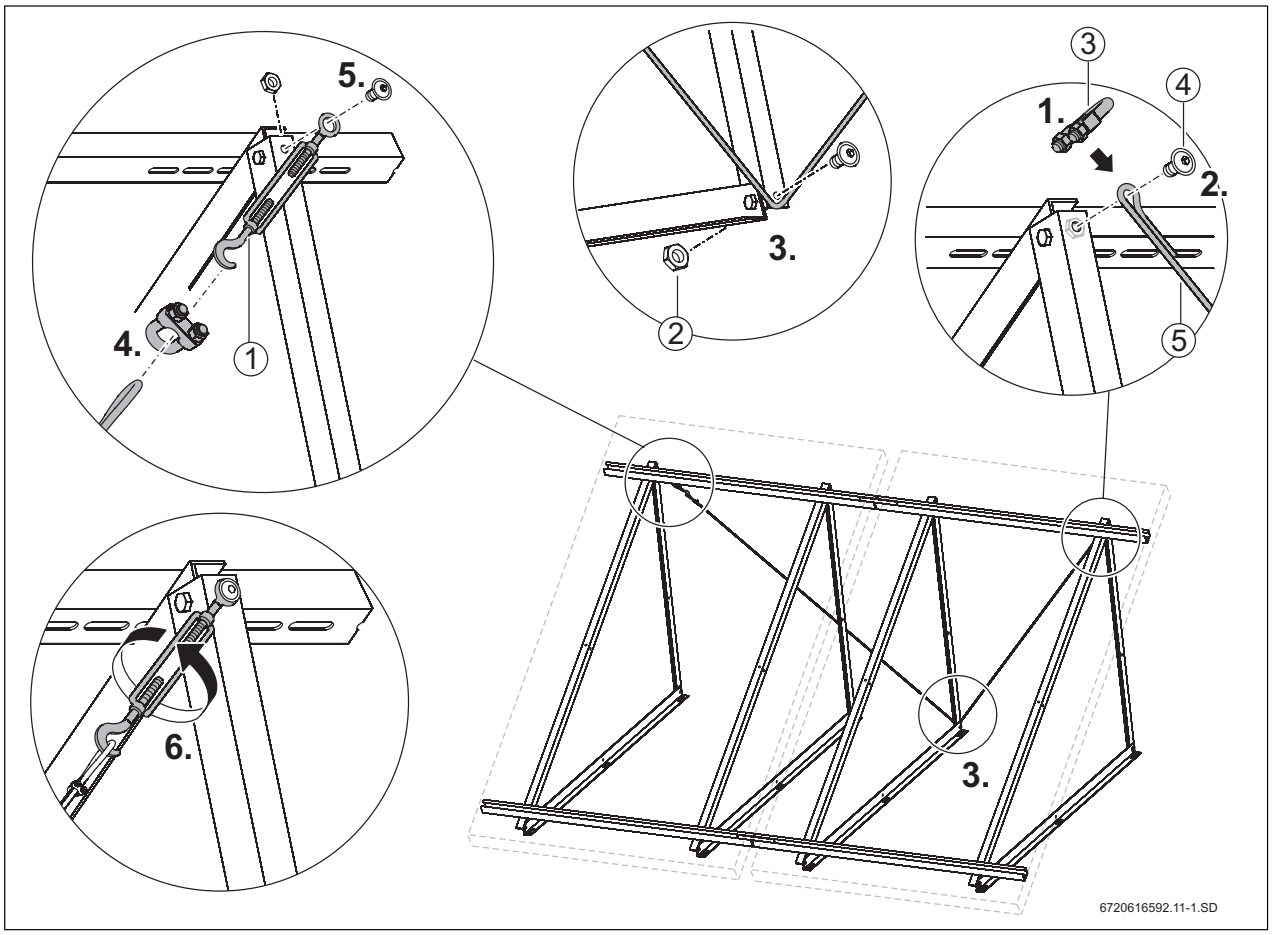

Fig. 26 Always attach the steel cable to two Portrait collectors

1 Turnbuckle
2 M8 nut
3 Cable clamp
4 M8 x 20 screw
5 Steel cable

Warning: System damage due to insufficient cable attachement.

- Ensure screw and nut (Fig. 26, Pos. 2) are sufficiently tight.

4.5 Routing the cable

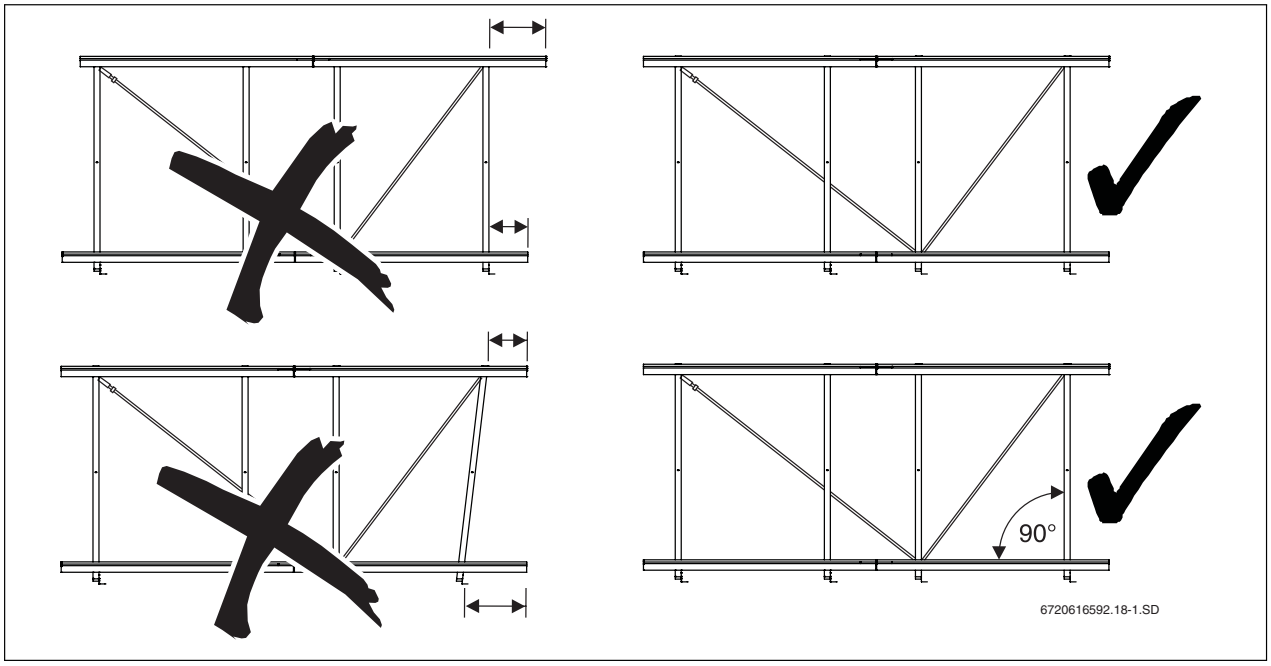

Fig. 27

4.6 Tightening screws

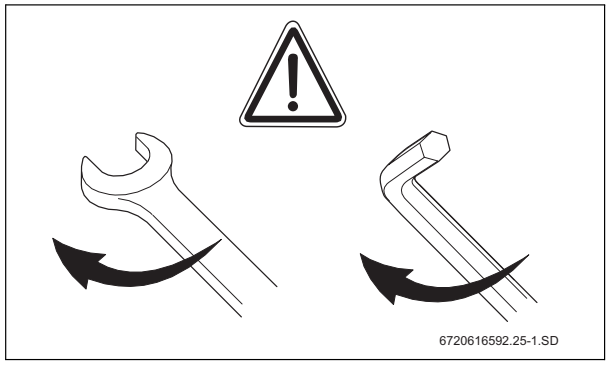

Fig. 28 Tighten all screws sufficiently

4.7 Installing collectors

For other installation steps not described here, please consult the on-roof instructions:

- Installing collectors
- Installing the collector sensor
- Connecting supply and return pipes
- Completion and final inspection

Ersatzteilliste
Spare parts list
Liste des pièces de rechange
Lista parti di ricambio
Lista de repuestos
Onderdelenlijst

FKF10 - 7747025399

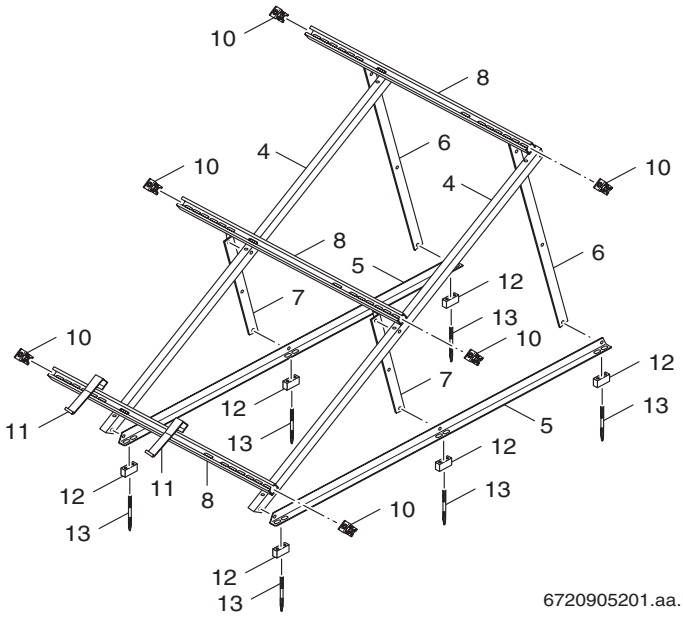

6720905201.aa.RS-Aufständerung senkrecht

Pos	Bestell-Nr.	Bezeichnung	Description	Dénomination	Descrizione	Descripción	Benaming	PG
4	**8 718 224 332 0**	Kollektor Strebe senkrecht	Collector rail	collecteur potence	Collettore verticale	Soporte colector vertical	collector steun	40
5	**8 718 224 333 0**	Strebe unten horizontal	Horizontal base rail	Traversa verticale	Perfil inferior vertical	Steun onter verticale		40
6	**8 718 224 334 0**	Strebe hinten senkrecht	Rear rail	Traversa verticale	Perfil lateral vertical			38
8	**8 748 511 002 0**	Horizontale Schiene	Horizontal rail	Barre 1165mm	Telaio 1165mm	Respaldo 1165mm	Strip 1165mm	34
10	**8 748 511 007 0**	Halter	Collector clamp	Support	Angolare	Soporte	Houder	32
11	**8 748 511 005 0**	Abrutschsicherung	Collector hanger	Slipping safety	sicurezza	Slipping safety	Slipping safety	29
12	**8 748 511 022 0**	Halterung	Attachment block	Support	Supporto	Sujeción	Houder	30
13	**8 748 511 024 0**	Stockschraube	Hanger bolt kit	Vis de bâton	viti	cerrojo	tapendbouten	27
	8 718 220 764 0	Befestigungsset	Attachment kit	Jeu de piéces de fixation	Set di fissaggio	Elementos de fijacion	Bevestigingsset	29
	8 718 224 337 0	Befestigungsset	Attachment kit	Jeu de piéces de fixation	Set di fissaggio	Juego piezas de fijacion	Bevestigingsset	33
	8 718 224 338 0	Befestigungsset	Attachment kit	Jeu de piéces de fixation	Set di fissaggio	Juego piezas de fijacion	Bevestigingsset	37
For:								

Notes

Notes

Notes

United States and Canada

Bosch Thermotechnology Corp.
50 Wentworth Avenue
Londonderry, NH 03053
Tel. 603-552-1100
Fax 603-584-1681
www.bosch.us
U.S.A.

Products manufactured by
Bosch Thermotechnik GmbH
Junkersstrasse 20-24
D-73249 Wernau
www.bosch-thermotechnology.com

Bosch Thermotechnology Corp. reserves the right to make changes without notice due to continuing engineering and technological advances.