Installation Instructions for changing the Fan Motor

660 EF/EFO

Part no. 8 700 928 345 0

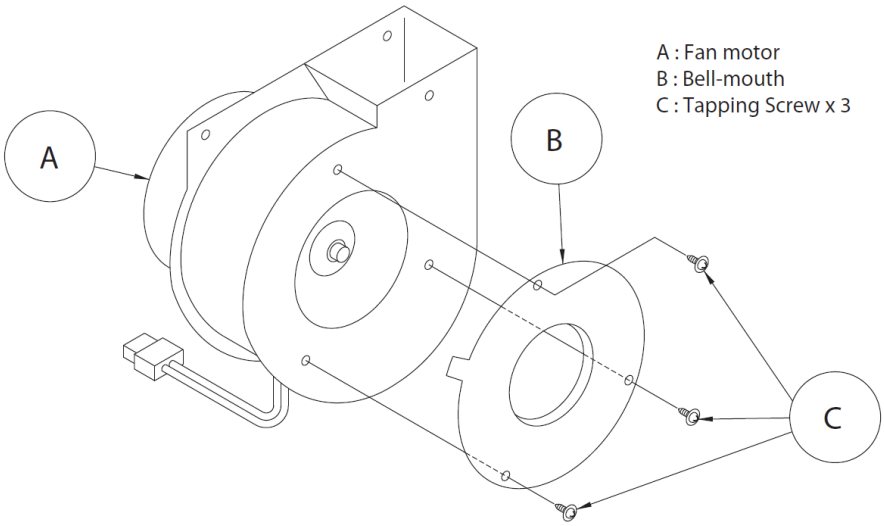

Warning: This kit must be installed by a qualified installer in accordance with these instructions and all applicable codes and requirements of the authorities having jurisdiction.

6 720 645 772 (2010/08) US/CA

BOSCH

1 Changing the Fan Motor

To replace the fan, remove two screws from the back of the heater cabinet and disconnect wire harness plug from fan. If Bell-mouth (B) is installed in the old fan motor, remove and install in new fan as shown in Fig. 1 to maintain the proper air volume. Install new fan in heater with two screws from the back of the heater cabinet and reconnect fan wire harness plug. After changing the fan motor, please follow the procedure "Circuit Board Settings With Remote Control" or "Circuit Board Settings Without Remote Control".
The water heater will not operate properly unless you carry out this step.

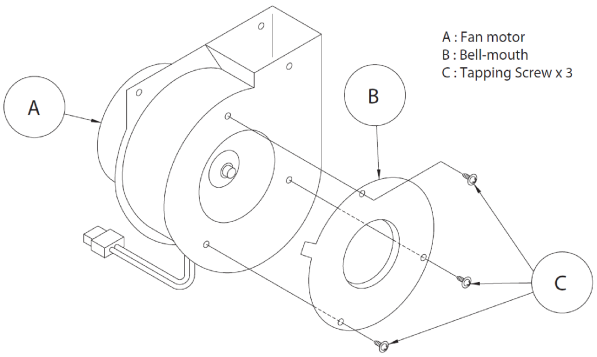

Fig. 1

Make sure to connect a remote controller before performing the below steps.

Circuit Board Settings with Remote Control

- Check that there is no water flow.
- Within the first ten minutes of connecting electrical power, before turning the water heater on[1)], press and hold the “FLOW METER ALARM SET” button on the remote controller until a tone is heard (2 sec.) and “120” (example) appears on the display.
- Press the “FLOW METER ALARM SET” button to change the writer number until “11 1” appears on the display.
- Press the “UP” button for 5 sec. to change the setting number from “1” to “2”. “11 2”.
- Set the “POWER” button to ON or let the unit sit for 30 seconds.

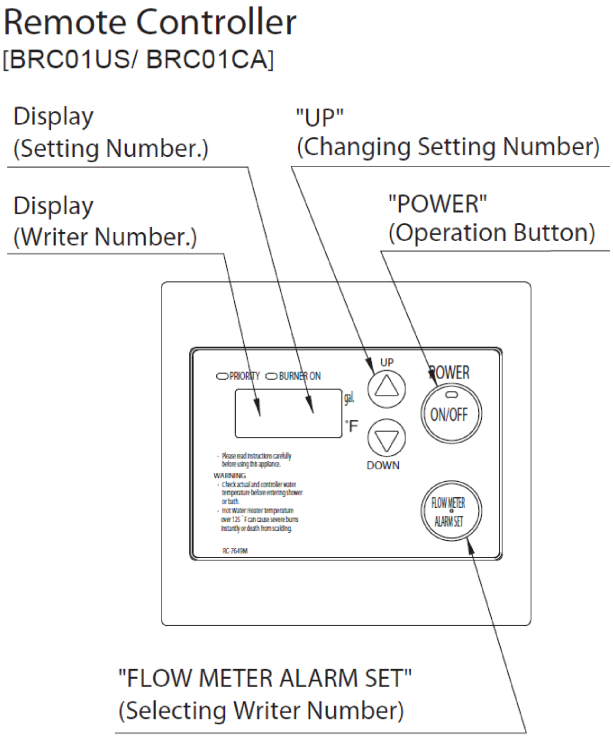

Fig. 2

Circuit Board Settings Without Remote Control

- Check that there is no water flow.
- Within the first ten minutes of connecting electrical power, before turning the water heater on[1)] , press and hold both the “UP” and “DOWN” buttons on the Circuit Board as illustrated to the right until the controller emits a beeping sound. The setting will not completed if this is not done.

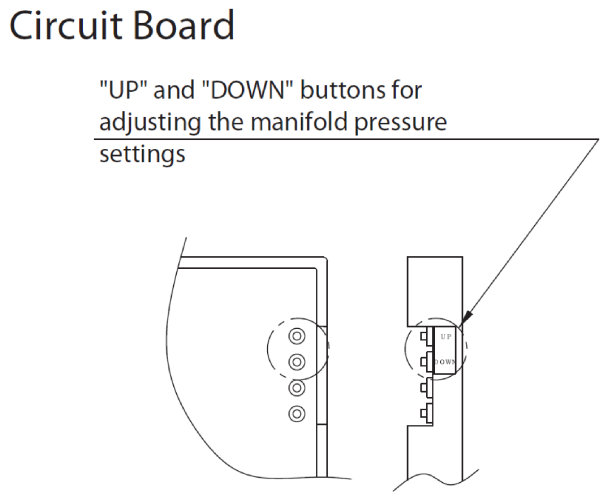

Fig. 3

1) Disconnect electrical power after setting the “Power” button off on the remote controller.
The water heater will automatically turn on when electrical power is reconnected if this step is not followed.

Replacement Parts available from:

BOSCH THERMOTECHNOLOGY CORPORATION

50 Wentworth Avenue
Londonderry, NH 03053
Tel. 866-330-2730
www.boschpro.com

Bosch Termotecnologia, SA
Estrada de Cacia
3800 - 533 Cacia - PORTUGAL

Recycled paper

© 2010 Bosch Thermotechnology Corp., Londonderry, NH