SBU/SBH/SBT

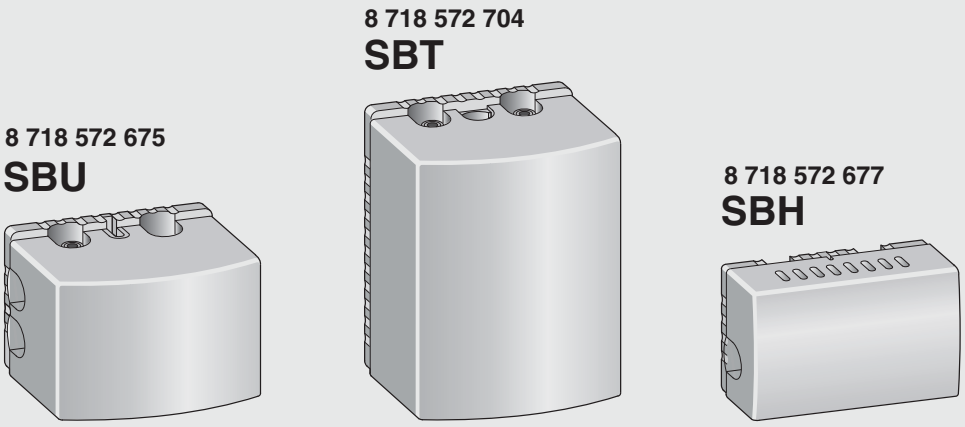

6 720 645 890 (2010/08) US/CA

1	SBU	4
2	SBT	7
3	SBH	11
4	Spare parts list	14

	[en]	To be installed by a trained and certified installer only.
	[fr]	Installation réservée à une entreprise spécialisée formée et certifiée.
	[es]	La instalación deberá ser llevada a cabo únicamente por un servicio técnico especializado.

	[en]	Observe the instruction manuals for both the device and any accessories used.
	[fr]	Respecter les instructions relatives à l'appareil et à tous les accessoires utilisés.
	[es]	Es imprescindible tener en cuenta las instrucciones del aparato y de todos los accesorios utilizados.

	[en]	Before carrying out electrical work: disconnect the installation from the power supply.
	[fr]	Avant toute intervention sur le circuit électrique : couper l'installation de la tension!
	[es]	Antes de los trabajos eléctricos: ¡Desconectar la tensión de la instalación!

1 SBU

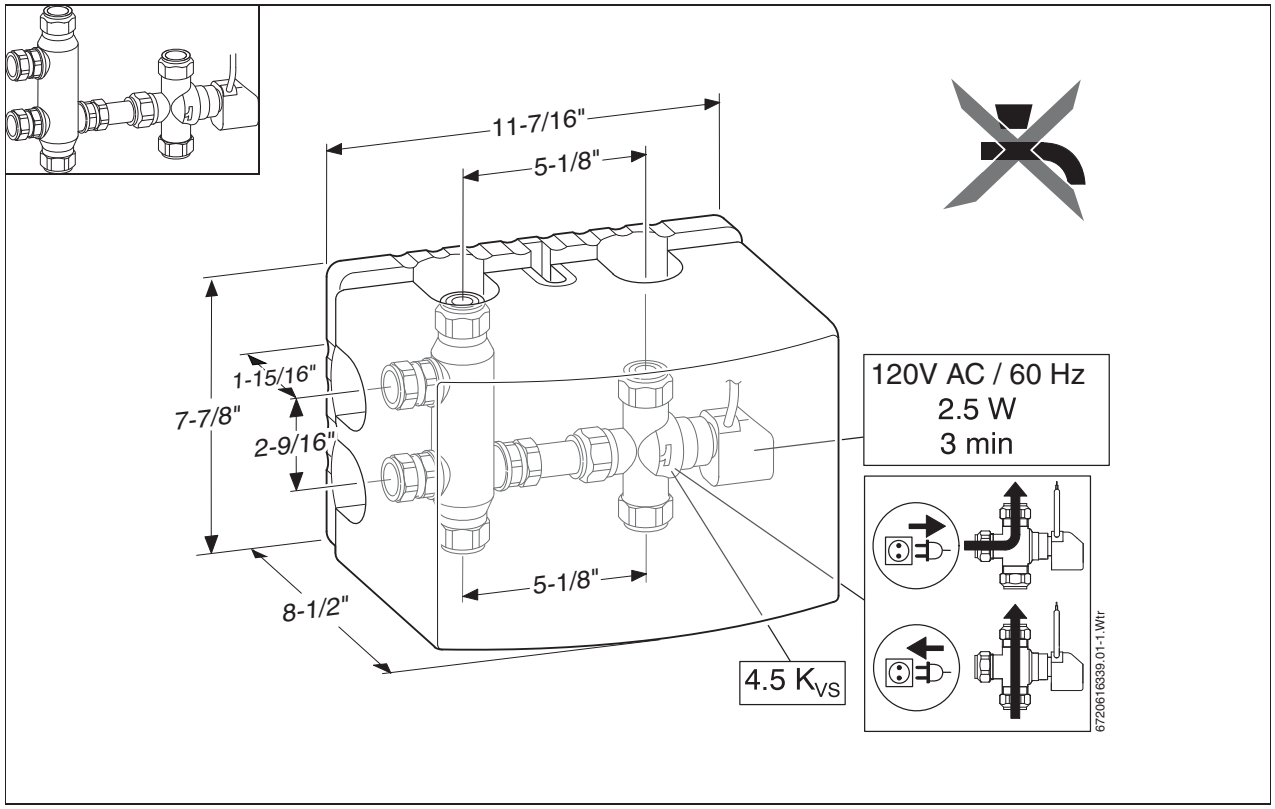

Fig. 1

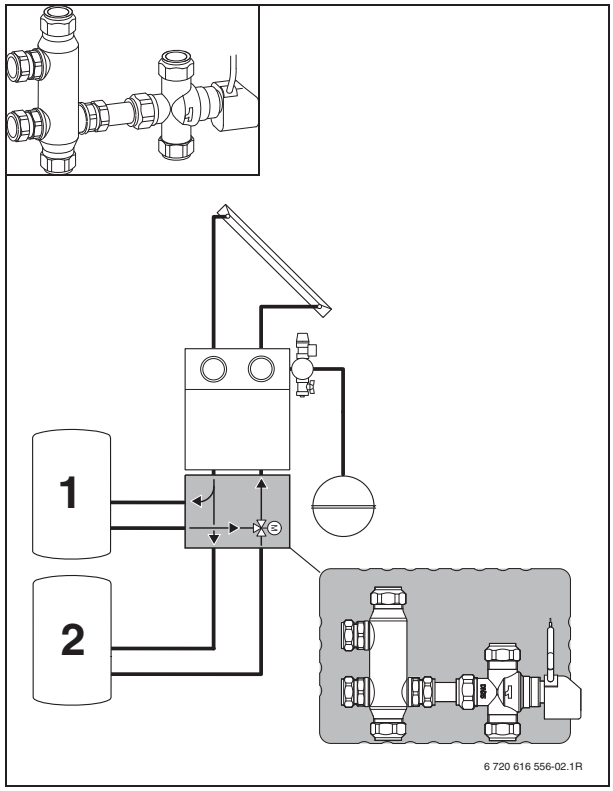

Fig. 2

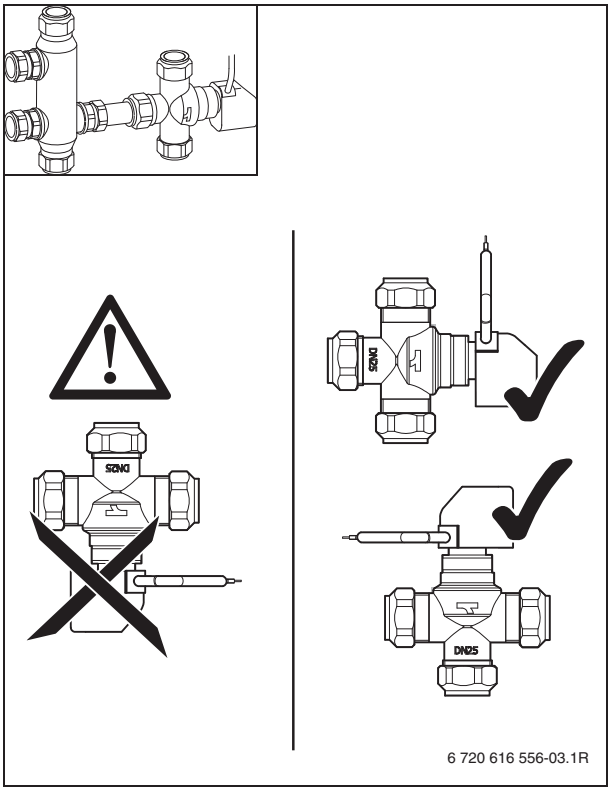

Fig. 3

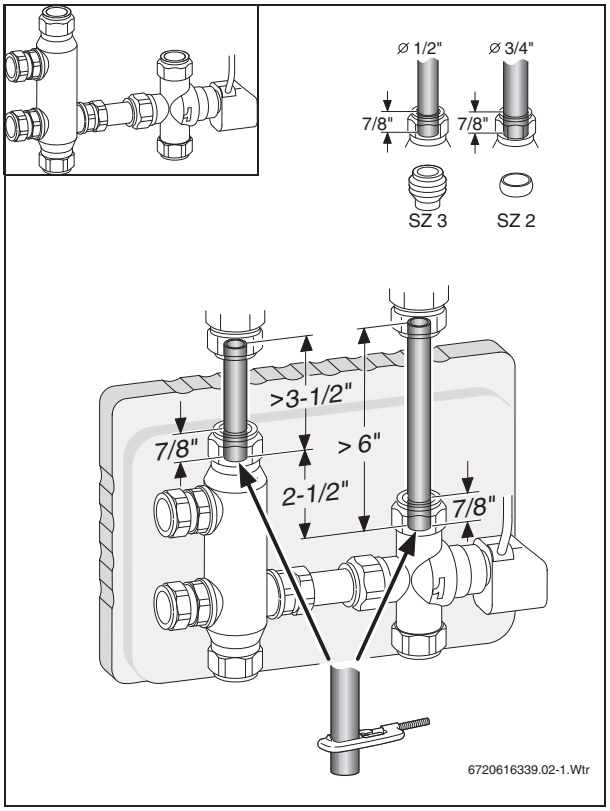

Fig. 4

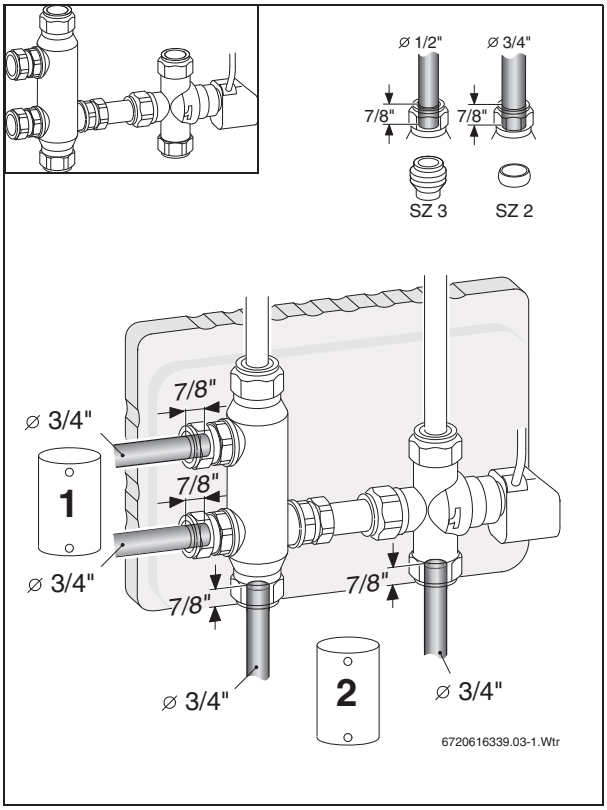

Fig. 5

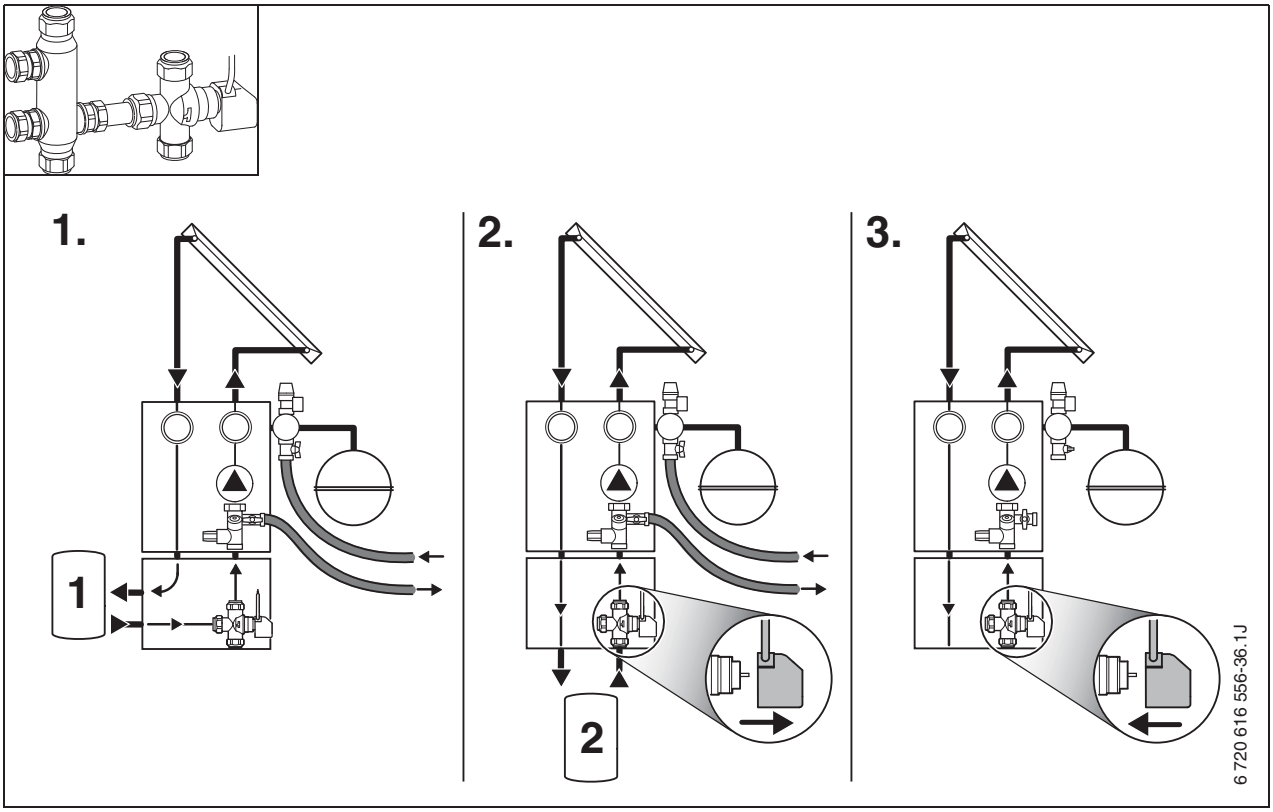

Fig. 6

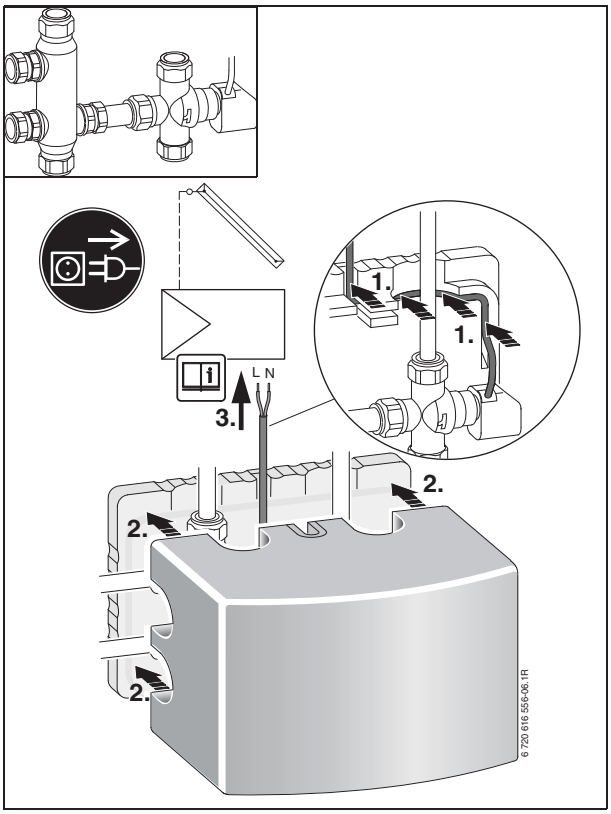

Fig. 7

2 SBT

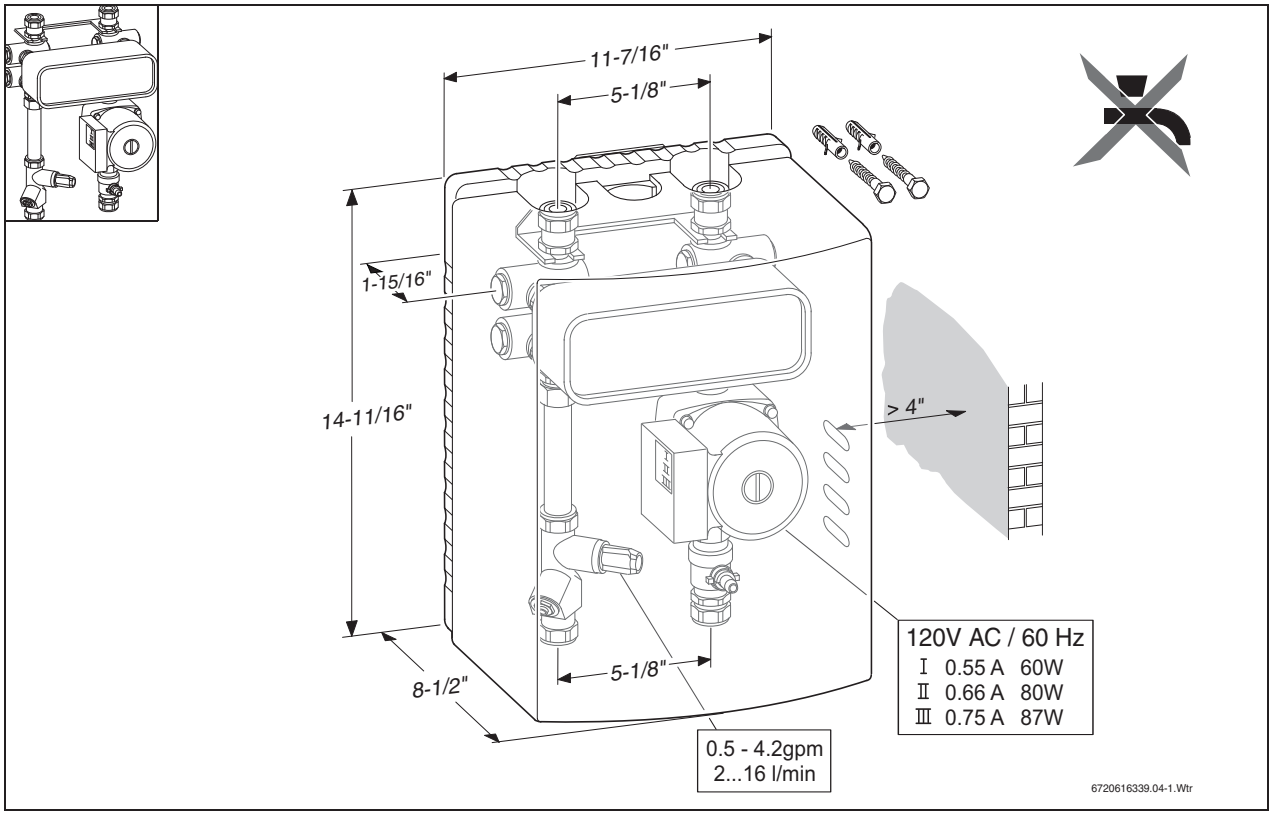

Fig. 1

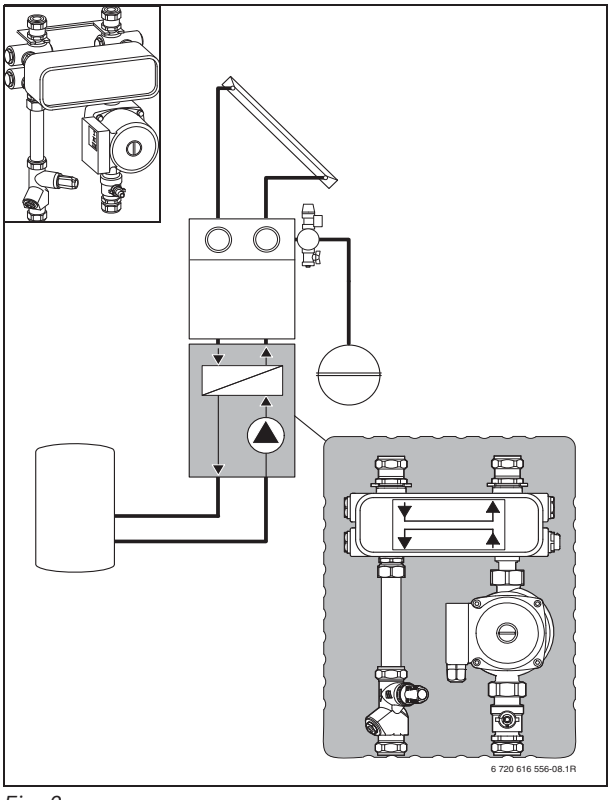

Fig. 2

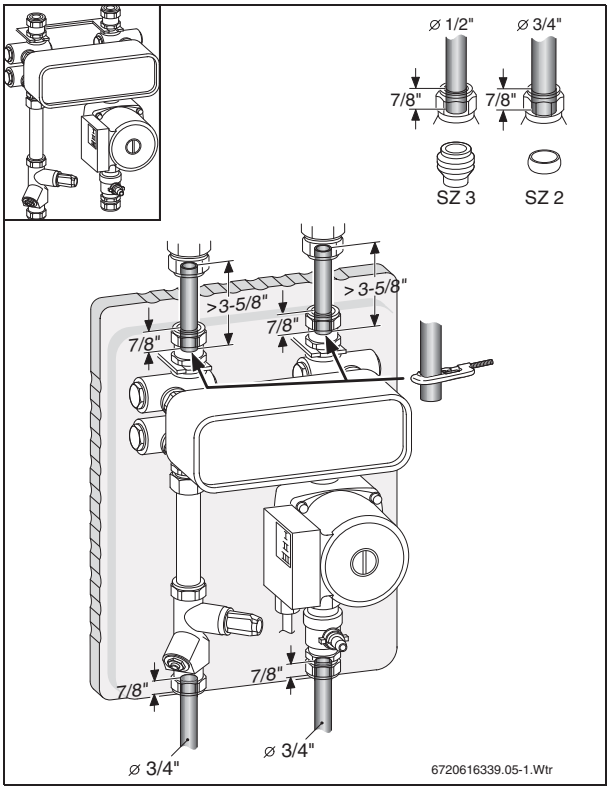

Fig. 3

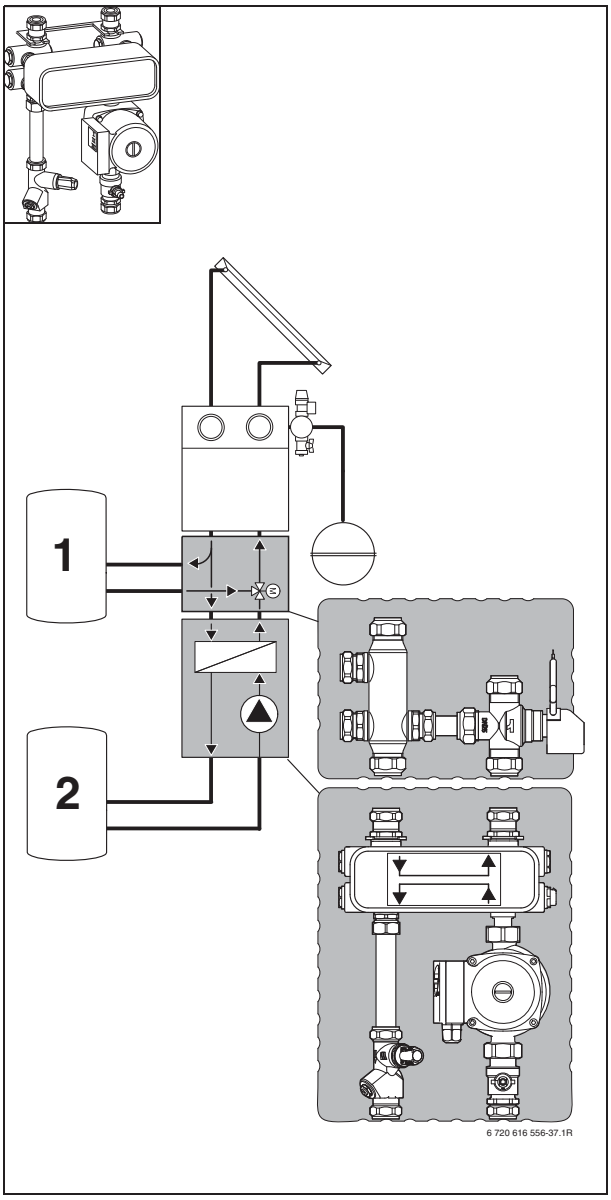

Fig. 4 SBT + SBU

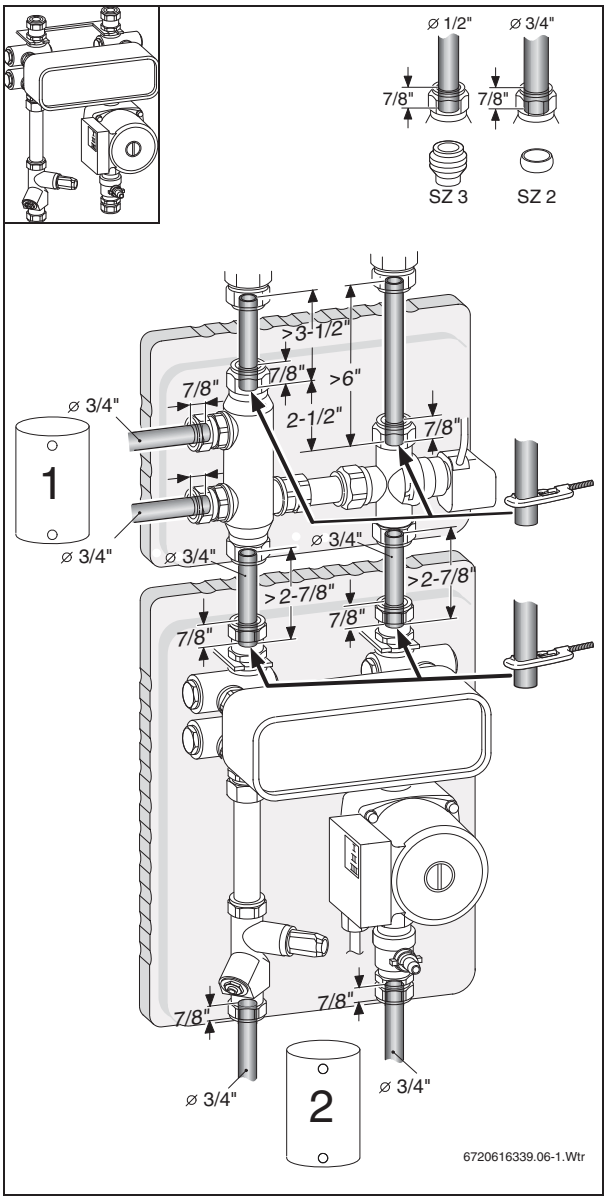

Fig. 5 SBT + SBU

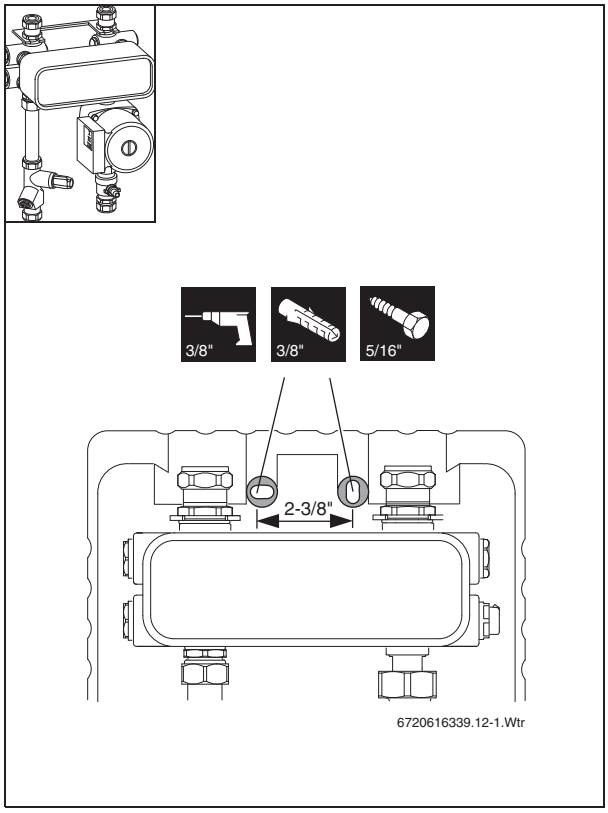

Fig. 6

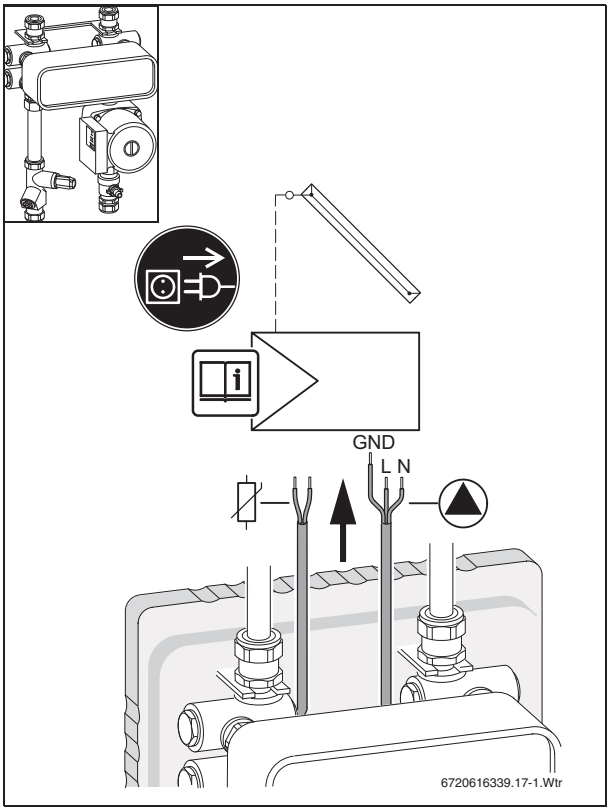

Fig. 8

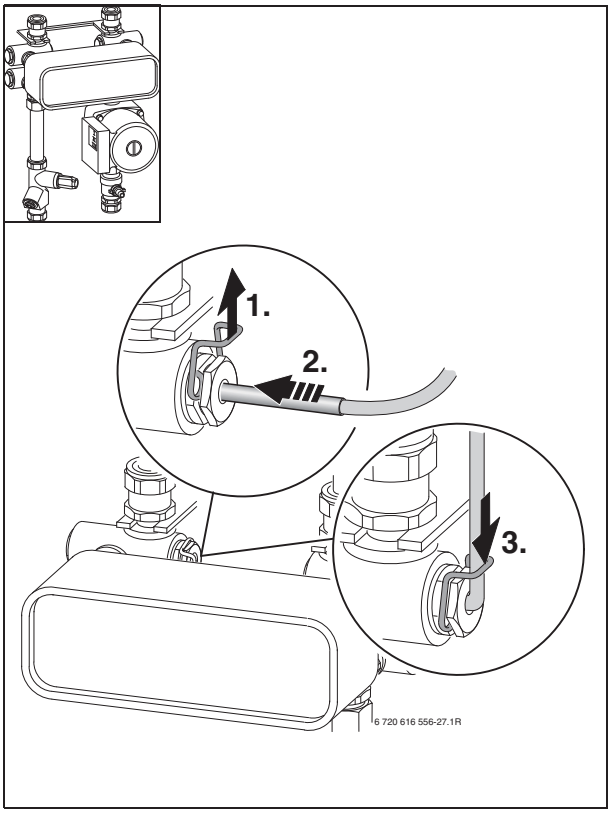

Fig. 7

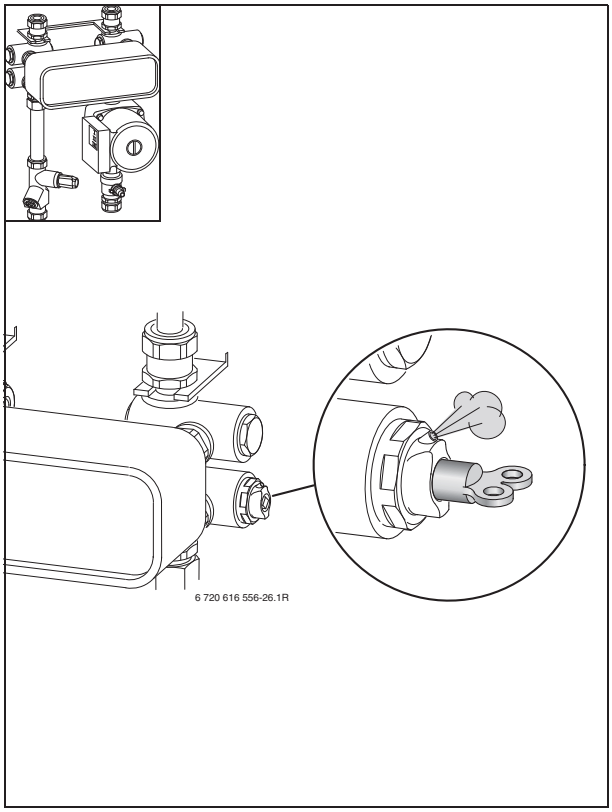

Fig. 9

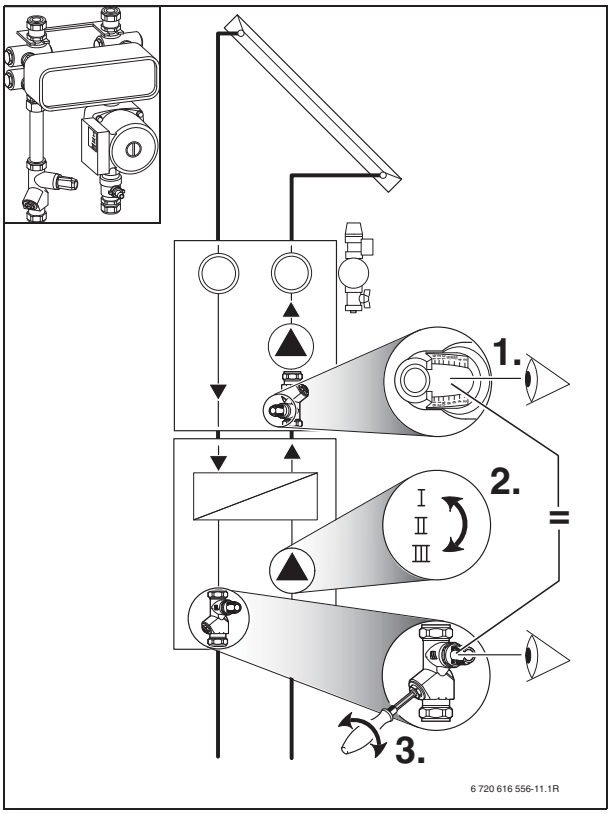

Fig. 10

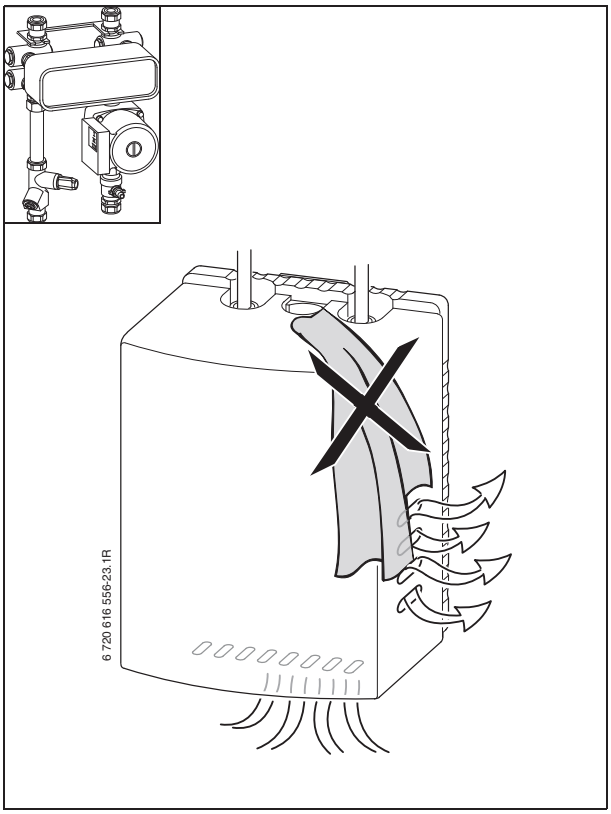

Fig. 12

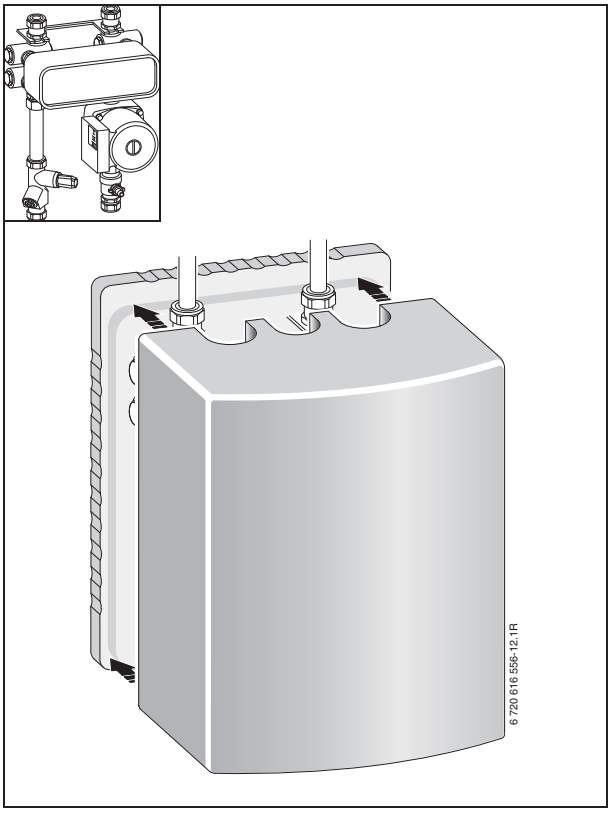

Fig. 11

3 SBH

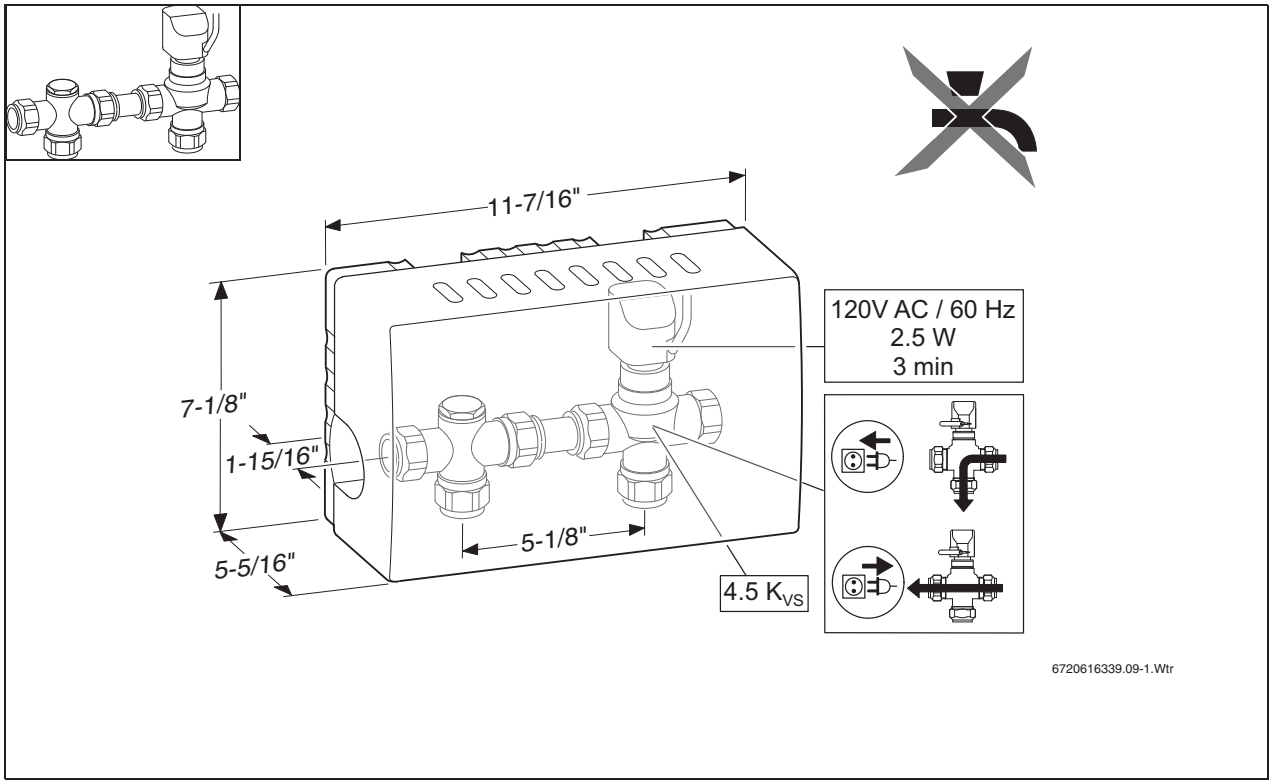

Fig. 1

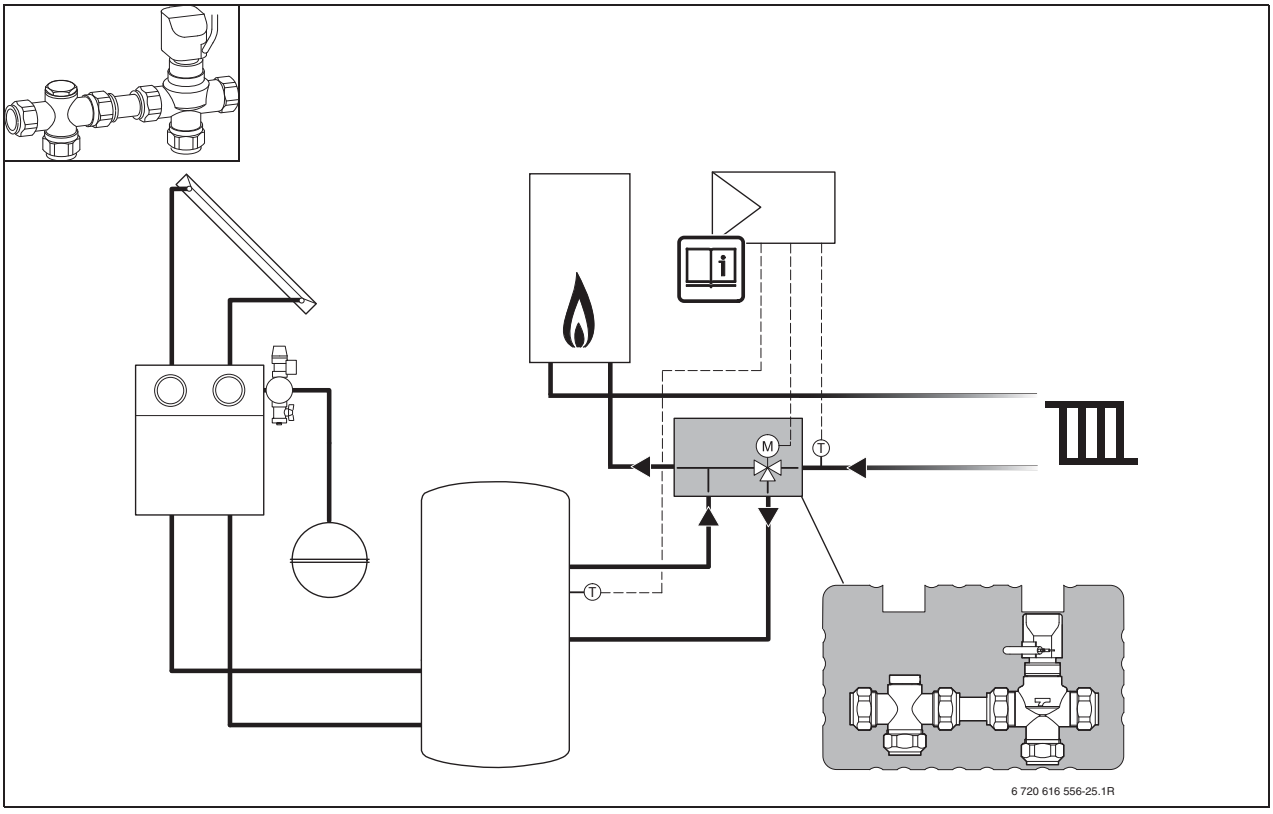

Fig. 2

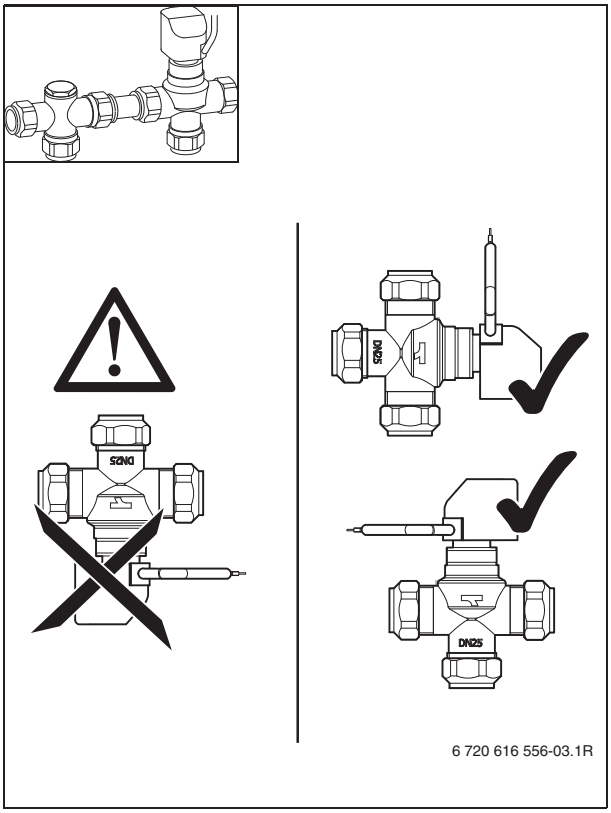

Fig. 3

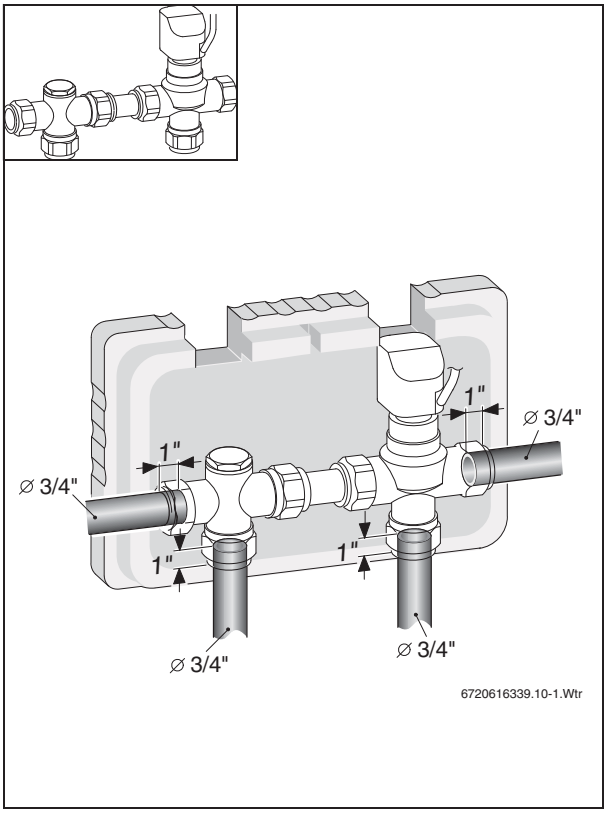

Fig. 4

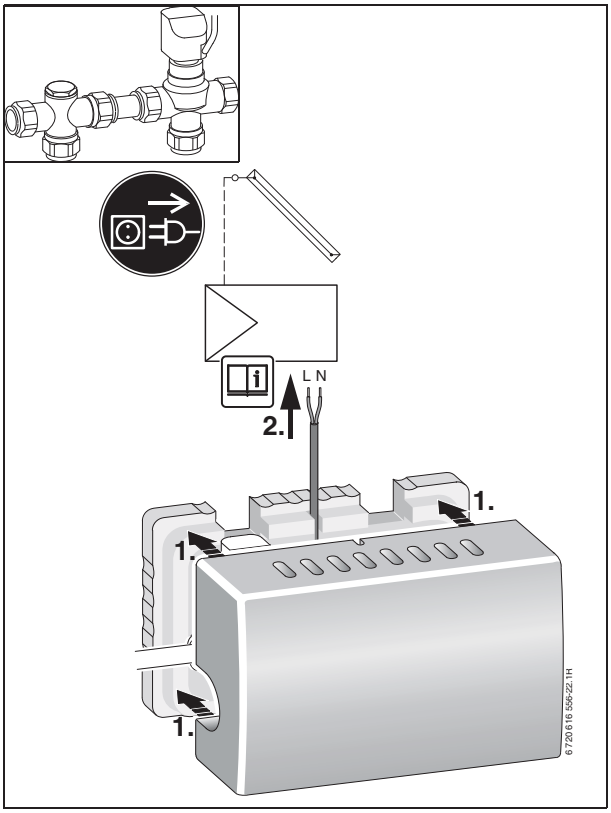

Fig. 5

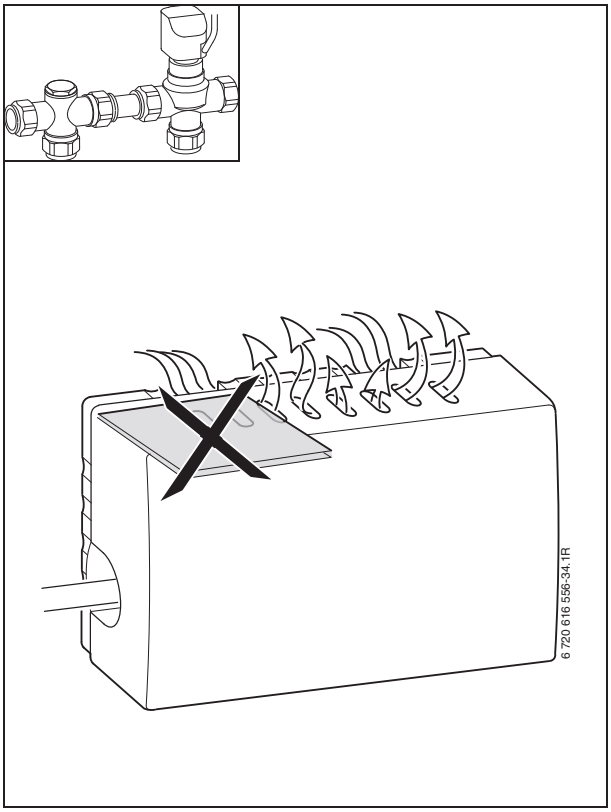

Fig. 6

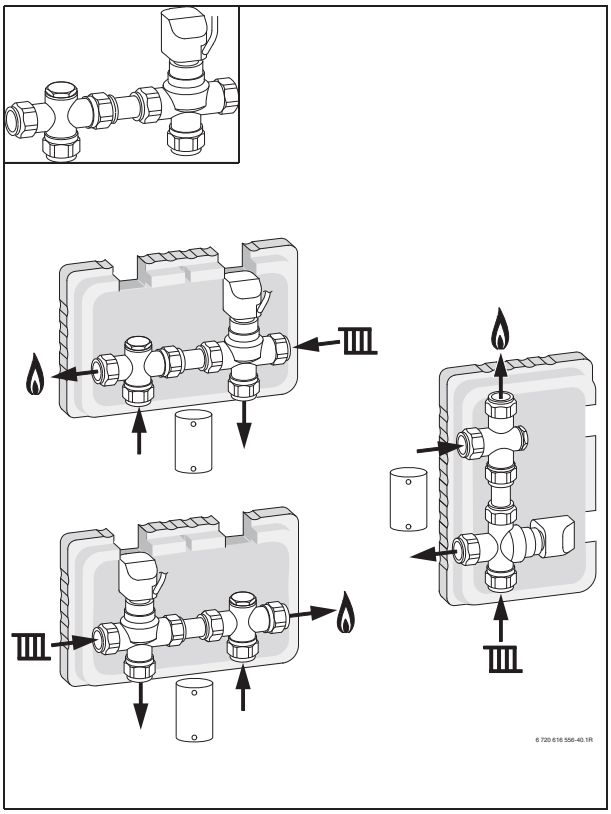

Fig. 7

4 Spare parts list

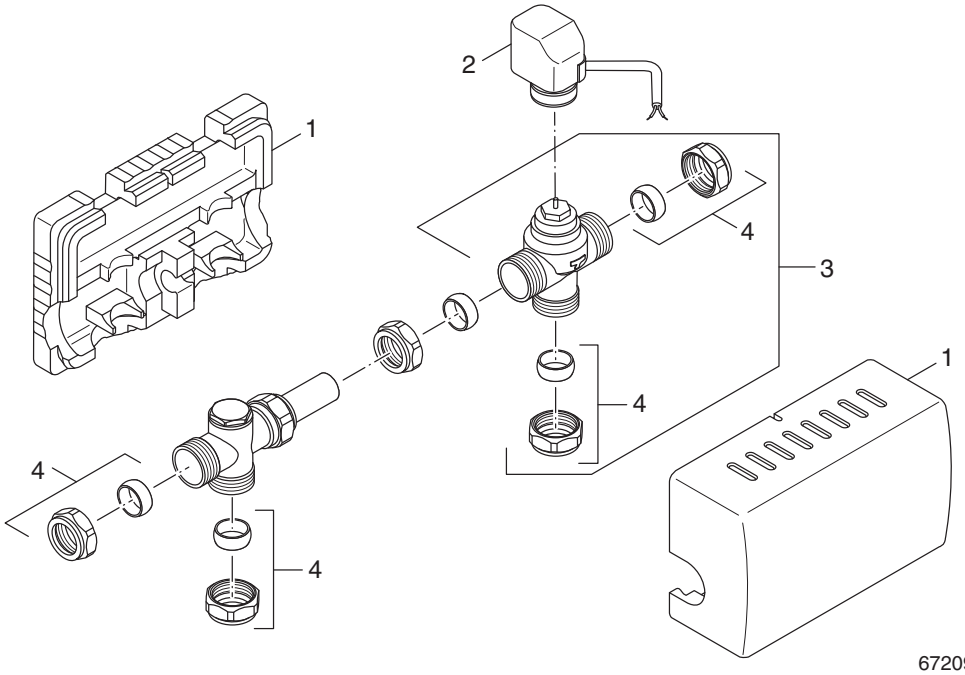

6720906735.aa.RS

SBH "US/CA" 8 718 572 677

Item	Part Description	Part Number	SBH "US/CA														remarks
1	Insulation	8 718 223 938 0	●														
2	Actuator NO US/CA	8 718 530 395 0	●														
3	Three way diverter valve cpl US/CA	8 718 530 394 0	●														
4	Connection set US/CA	8 718 223 697 0	●														

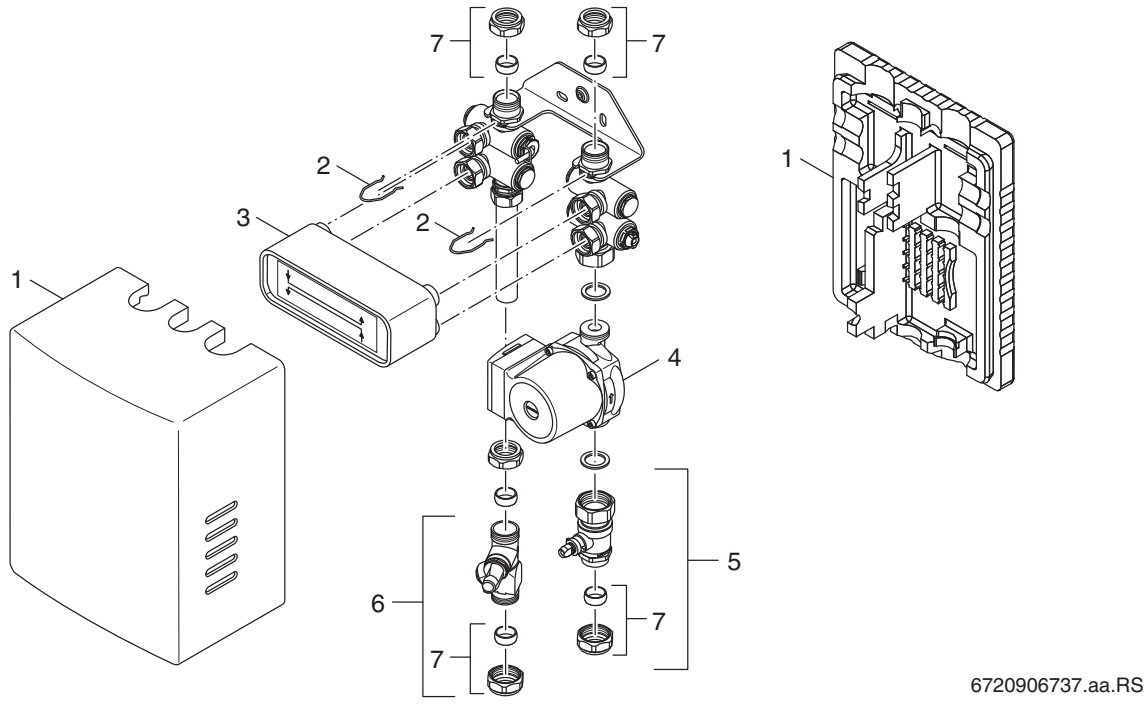

SBT "US/CA" 8 718 572 704

Item	Part Description	Part Number	SBT "US/CA															remarks
1	Insulation SBT cpl US/CA	8 718 530 4010	●															
2	Clip	8 718 223 9400	●															
3	Heat exchanger system 210x73x75	6 303 339 7	●															
4	Pump US/CA UPS15-58	8 718 223 690 0	●															
5	Ball valve SBT US/CA	8 718 530 402 0	●															
6	Flow_setter 0.13-1.6 gpm SBT US/CA	8 718 530 403 0	●															
7	Connection set US/CA	8 718 223 697 0	●															

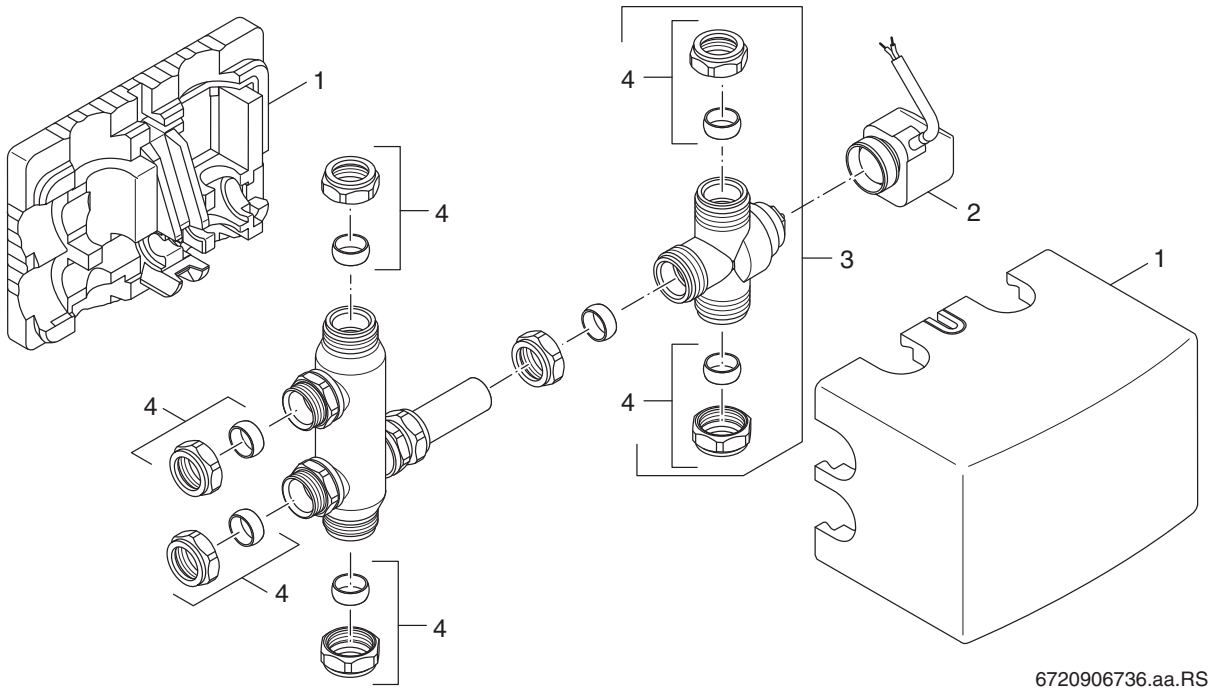

6720906736.aa.RS

SBU "US/CA" 8 718 572 675

Item	Part Description	Part Number	SBU "US/CA															remarks
1	Insulation	8 718 223 989 0	●															
2	Actuator NC US/CA	8 718 530 419 0	●															
3	Three way diverter valve cpl US/CA	8 718 530 394 0	●															
4	Connection set US/CA	8 718 223 697 0	●															

United States and Canada

Bosch Thermotechnology Corp.
50 Wentworth Avenue
Londonderry, NH 03053
Tel. 603-552-1100
Fax 603-584-1681
www.bosch.us
U.S.A.

Products manufactured by
Bosch Thermotechnik GmbH
Junkersstrasse 20-24
D-73249 Wernau
www.bosch-thermotechnology.com

Bosch Thermotechnology Corp. reserves the right to make changes without notice due to continuing engineering and technological advances.