Installation Instructions for Contractors

Connection Sets

Solar Twin Tube



6 720 645 448-00.1RS

Inox 1/2"
Inox 3/4"

6 720 646 309 (2011/02) US/CA

Contents

1 Explanation of symbols and safety information 3
1.1 Explanation of symbols 3
1.2 General safety instructions 3

2 Scope of delivery 4
2.1 Solar twin tube Inox 1/2" 4
2.2 Solar twin tube Inox 3/4" 4

3 Installation 5
3.1 Routing cables outside 5
3.2 Trimming the solar twin tube to length . . . 6
3.3 Installation of solar twin tube Inox 1/2" 6
3.3.1 Connecting to the collectors 6
3.3.2 Install the collector connections on the KS pump stations 7
3.3.3 Extending the collector connection lines 7
3.4 Installation of solar twin tube Inox 3/4" 8
3.4.1 Connecting to the collectors 8
3.4.2 Install the collector connections on the 0110 KS pump station 8
3.4.3 Extending the collector connection lines 9

4 Spare parts catalog 10

1 Explanation of symbols and safety information

1.1 Explanation of symbols

Warnings



Warnings are indicated in the text by a warning triangle and a gray background.



In case of danger due to electric shock, the exclamation point on the warning triangle is replaced with a lightning symbol.

Signal words at the beginning of a warning are used to indicate the type and seriousness of the ensuing risk if measures for minimizing damage are not taken.

- **NOTICE** indicates that minor damage to property may occur.
- **CAUTION** indicates possible minor to medium personal injury.
- **WARNING** indicates possible severe personal injury.
- **DANGER** indicates that severe personal injury may occur.

Important information



Important information that presents no risk to people or property is indicated with this symbol. It is separated by horizontal lines above and below the text.

Additional symbols

Symbol	Meaning
▶	Sequence of steps
→	Cross-reference to other points in this document or to other documents
•	Listing/list entry
–	Listing/list entry (2nd level)

Tab. 1

1.2 General safety instructions

About this manual

These instructions contain important information for the safe and correct installation of the twin tube solar kits.

The instructions are intended for trained and certified installers.

▶ Follow installation instructions for all components used, especially the solar pump station.

2 Scope of delivery

- Before starting installation, check whether all the parts are present.

If this delivery is not complete, immediately notify your supplier about the discrepancy.

2.1 Solar twin tube Inox 1/2"

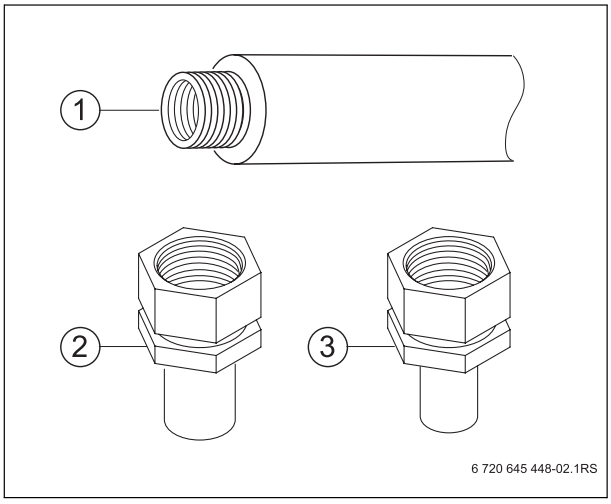

Fig. 1 Scope of delivery solar twin tube Inox 1/2"

1	Solar twin tube 1/2" – 50' (15.25 m)	1x
2	Fitting 1/2" x 3/4" (brass) for connection to the pump station KS0110	2x
3	Fitting 1/2" x 1/2" (brass) for connection to the collector and the pump station KS0105	4x

2.2 Solar twin tube Inox 3/4"

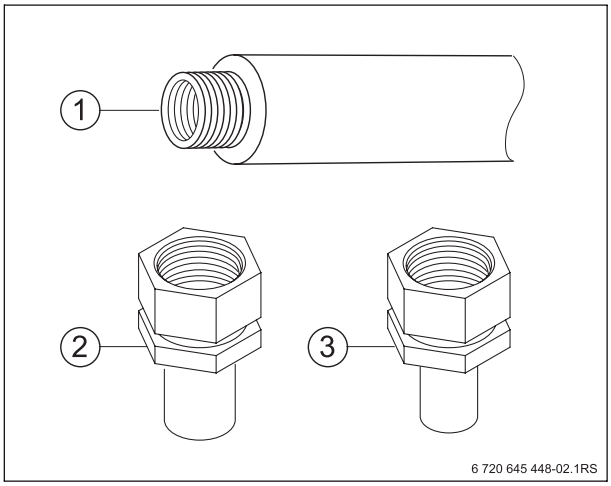

Fig. 2 Scope of delivery solar twin tube Inox 3/4"

1	Solar twin tube 3/4" – 50' (15.25 m)	1x
2	Fitting 3/4" x 3/4" (brass) for connection to the pump station KS0110	2x
3	Fitting 3/4" x 1/2" (brass) for connectionto the collector	2x

3 Installation

The connection kits and the solar twin tube are used to connect different parts of the solar thermal system.

The solar twin tube is an insulated parallel pipe.

You need one connection kit for each collector array. The collectors are connected to one another by solar hoses (connection kit).

The connections between the pump station and the storage tank are made with rigid copper pipe.

Please also follow the instructions for supply and return pipes in the installation instructions for collectors and the pump station.

Observe all codes and regulations applicable to the installation and operation of the system in your country.

3.1 Routing cables outside

CAUTION: Cut injuries from burrs!

- Cut the stainless steel corrugated pipe straight.
- If necessary, de-burr the stainless steel pipe after cutting.

To avoid unnecessary line resistance, run the pipes as straight as possible.

- Avoid twisting the line set.
- Only use high temperature-resistant thermal insulation.
- Do not install uninsulated stainless steel corrugated pipe due to cold crack corrosion.

- Route piping system with the cable towards the roof side.

Bends

With the flexible stainless steel corrugated pipe, bends up to 90° can be realized easily (no flexing back).

Thermal insulation

The thermal insulation is high temperature and UV-resistant. To guarantee permanent protection against animal bites and esthetic looks for outdoor pipe runs, we recommend running the insulated pipe inside of an aluminum flex tube for additional protection.

The thermal insulation does not just prevent heat loss, it is also required for safety reasons (fire protection, protection against burns).

- Insulate the stainless steel corrugated pipe and all connections completely after installation.

Fastening

Specially adapted pipe brackets are available for fastening our products to walls and ceilings. We recommend a distance of 5 ft (1.5 m) between brackets.

Damage to the insulation jacket

Possible damage to the PE casing of the twin tube system that can be done during laying can be repaired with the included PE adhesive tape.

How to identify the pipes

To distinguish the supply and return pipes, only one of the stainless steel corrugated pipes is marked with a continuous stripe.

Storage

In order to prevent pressure marks on the thermal insulation, always store the pipes and accessories horizontally in the carton.

3.2 Trimming the solar twin tube to length

It may be necessary to trim the solar twin tube to length.

- ▸ Use a suitable saw to trim the solar twin tube to a preliminary length of approximately 1" (25 mm) longer than the desired length.
- ▸ Insert the cutting aid into the solar twin tube.

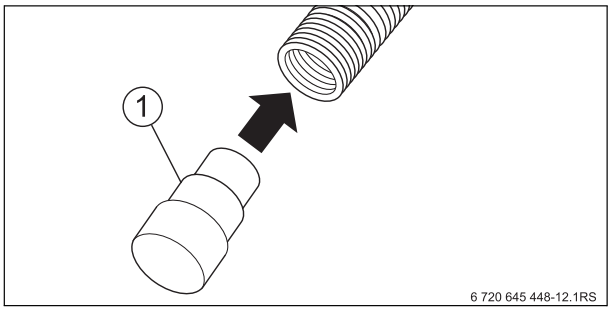

Fig. 3 Inserting the cutting aid

1 Cutting aid

- ▸ Trim the solar twin tube with a pipe cutter.

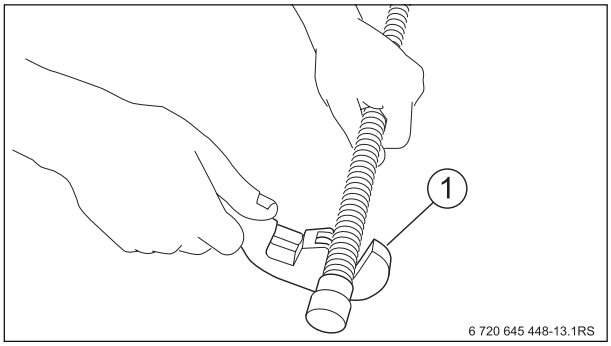

Fig. 4 Trimming the solar twin tube to length

1 Pipe cutter

- ▸ Remove the cutting aid.
- ▸ If necessary, de-burr the end.
- ▸ Cut the thermal insulation according to the length of the solar twin tube and insert the solar twin tube.

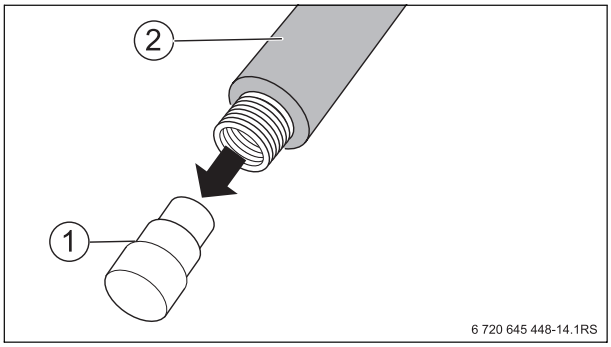

Fig. 5 Inserting the pipe

1 Cutting aid
2 Thermal insulation

3.3 Installation of solar twin tube Inox 1/2"

For use, follow the included installation instructions for the solar twin tube.

3.3.1 Connecting to the collectors

Each collector array uses a connection set to connect with the supply and return piping and the air vent (if installed). The collector connection set terminates in 1/2" compression fittings, which requires the 1/2" x 1/2" fittings.

- ▸ Install the collector connection set according to the collector instructions.
- ▸ Loosen the nut [2] on the fitting a half turn.
- ▸ Insert the solar twin tube [1] into the fitting until you hear a click.
- ▸ Secure the nut and tighten (approx. 2 turns).
- ▸ Insert the fitting nipple into the compression fitting of the collector connection set and tighten.

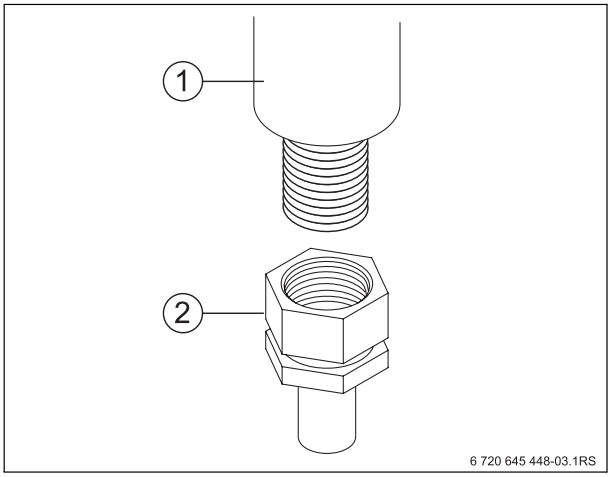

Fig. 6 Installing the solar twin tube fitting

1 Solar twin tube 1/2"
2 Fitting nut 1/2" x 1/2"

3.3.2 Install the collector connections on the KS pump stations

The solar twin tube nipple fits directly into the compression fitting of the pump station.

- ▸ Loosen the nut [2] on the fitting a half turn.
- ▸ Insert the solar twin tube into the fitting until you hear a click.
- ▸ Secure the nut and tighten (approx. 2 turns).

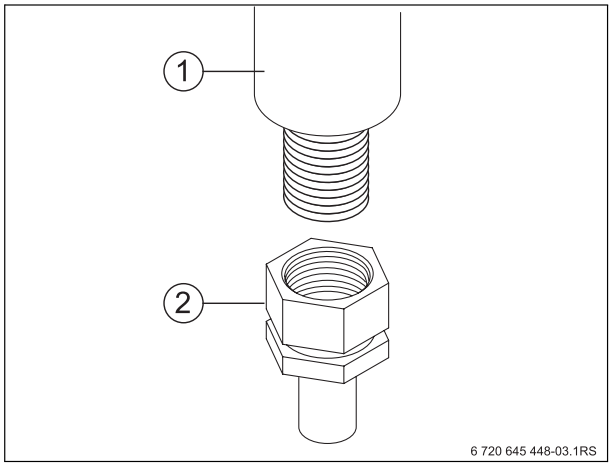

Fig. 7 Installing the solar twin tube fitting

1 Solar twin tube 1/2"
2 Fitting nut

- ▸ Insert the fitting nipple into the compression fitting of the pump station and tighten.

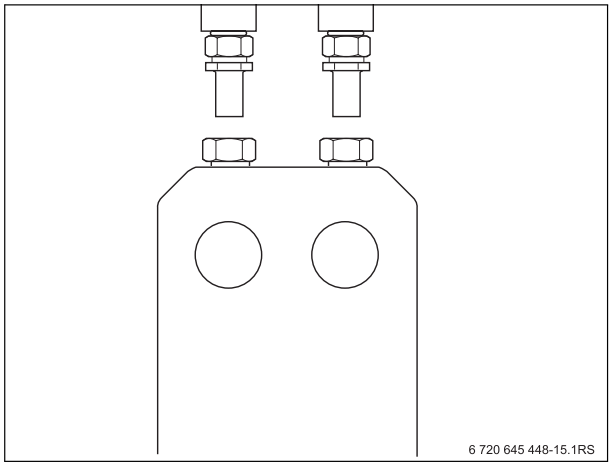

Fig. 8 Connection on the pump station

3.3.3 Extending the collector connection lines

Do not exceed a total length of 50' (15.25 m) for the solar twin tube!

Solar twin tubes can be joined together using a union (accessory).

- ▸ Loosen both nuts on the union 1/2" x 1/2" [1] (accessory) a half turn.
- ▸ Insert the solar twin tubes into the union nuts until you hear a click.
- ▸ Secure the union nuts and tighten (approx. 2 turns).

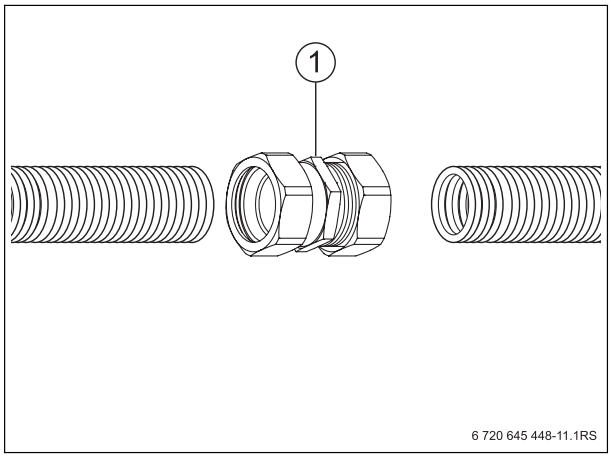

Fig. 9 Connecting two the solar twin tubes with union

1 Union 1/2" x 1/2" (accessory)

3.4 Installation of solar twin tube Inox 3/4"

For use, follow the included installation instructions for the solar twin tube.

3.4.1 Connecting to the collectors

Each collector array uses a connection set to connect with the supply and return piping and the air vent (if installed). The collector connection set terminates in 1/2" compression fittings, which requires the 1/2" x 3/4" fittings.

- ▸ Install the collector connection set according to the collector instructions.
- ▸ Loosen the nut [2] on the fitting a half turn.
- ▸ Insert the solar twin tube [1] into the fitting until you hear a click.
- ▸ Secure the nut and tighten (approx. 2 turns).
- ▸ Insert the fitting nipple into the compression fitting of the collector connection set and tighten.

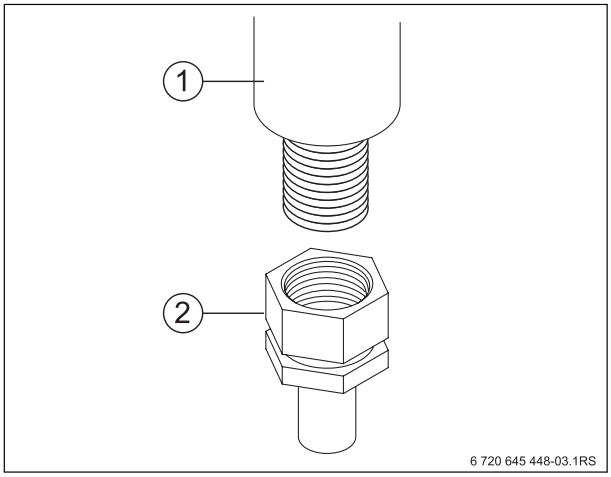

Fig. 10 Installing the solar twin tube fitting

1 Solar twin tube 3/4"
2 Nut of the fitting 1/2" x 3/4"

3.4.2 Install the collector connections on the KS0110 pump station

The solar twin tube nipple fits directly into the compression fitting of the pump station.

- ▸ Loosen the nut [2] on the fitting 3/4" x 3/4" a half turn.
- ▸ Insert the solar twin tube into the fitting until you hear a click.
- ▸ Secure the nut and tighten (approx. 2 turns).

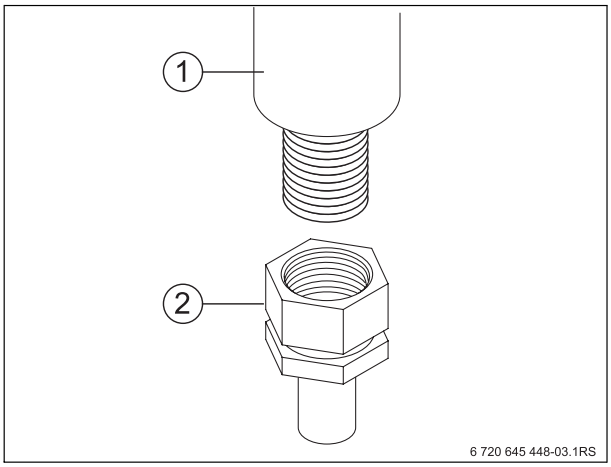

Fig. 11 Installing the solar twin tube fitting

1 Solar twin tube 3/4"
2 Nut of the fitting 3/4" x 3/4"

- ▸ Insert the fitting nipple into the compression fitting of the pump station and tighten.

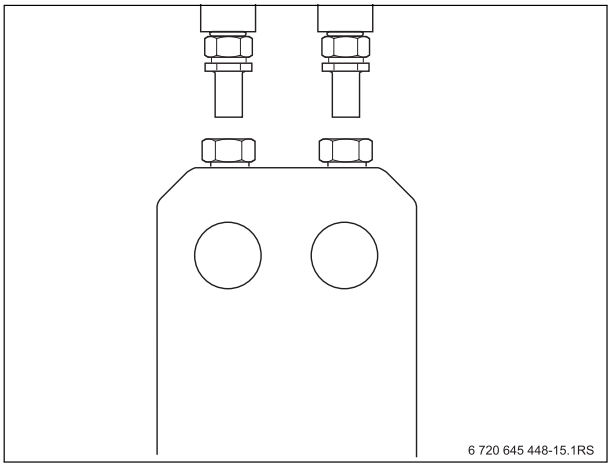

Fig. 12 Connection on the pump station

3.4.3 Extending the collector connection lines

Do not exceed a total length of 50' (15.25 m) for the solar twin tube!

Solar twin tubes can be joined together using a union (accessory).

- Loosen both nuts on the union 3/4" x 3/4" [1] (accessory) a half turn.
- Insert the solar twin tubes into the union nuts until you hear a click.
- Secure the union nuts and tighten (approx. 2 turns).

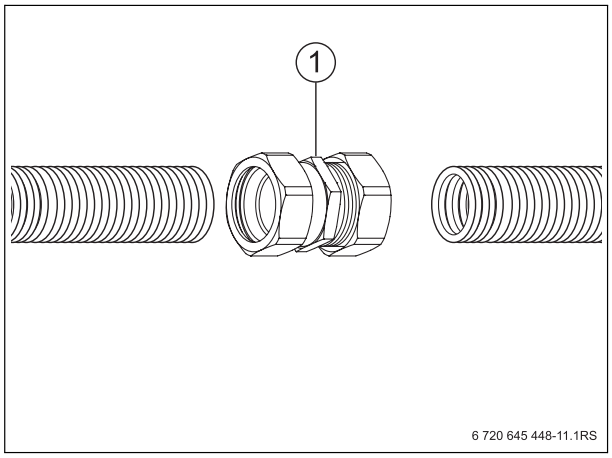

Fig. 13 Connecting two the solar twin tubes with union

1 Union 3/4" x 3/4" (accessory)

4 Accessories

Item	Part Description	Part Number	Set of	Remarks
1	Fitting Set Twin Tube Stainless Steel 1/2" x 1/2" pipe	8 718 530 800	2	
2	Fitting Set Twin Tube Stainless Steel 1/2" x 3/4" pipe	8 718 530 801	2	
3	Fitting Set Twin Tube Stainless Steel 3/4" x 1/2" pipe	8 718 530 802	2	
4	Fitting Set Twin Tube Stainless Steel 3/4" x 3/4" pipe	8 718 530 803	2	
5	Union for Twin Tube Stainless Steel 1/2" x 1/2"	8 718 530 814	2	Accessories
6	Union for Twin Tube Stainless Steel 3/4" x 3/4"	8 718 530 815	2	Accessories

Notes

United States and Canada

Bosch Thermotechnology Corp.
50 Wentworth Avenue
Londonderry, NH 03053
Tel. 603-552-1100
Fax 603-584-1681
www.bosch-climate.us
U.S.A.

Products manufactured by
Bosch Thermotechnik GmbH
Junkersstrasse 20-24
D-73249 Wernau
www.bosch-thermotechnology.com

Bosch Thermotechnology Corp. reserves the right to make changes without notice due to continuing engineering and technological advances.