Installation and Maintenance Instructions

DHW Tank

QWST120 O



6 720 648 100-00.1ITL

6 720 648 071 (2012/03) US

Table of Contents

1 Key to symbols and safety instructions 3
1.1 Explanation of symbols 3
1.2 Safety instructions 3

2 General points 5
2.1 Delivered condition 5
2.2 Tank installation 5

3 Moving the tank 6

4 Dimensions and connections 7

5 Installation 8
5.1 Safety limits 8
5.2 Connections and fittings 8
5.3 Temperature monitoring control options . . 9
5.3.1 Installing the temperature sensor 9
5.3.2 Installing the Aquastat 10

6 Commissioning 11

7 Maintenance and cleaning 12
7.1 Checking the magnesium anode 12
7.2 Cleaning 13
7.3 Recommissioning after cleaning 13

8 Spare parts for QWST120 O 14

1 Key to symbols and safety instructions

1.1 Explanation of symbols

Warnings



Warnings are indicated in the text by a warning triangle and a gray background.



In case of danger from electric shock, the exclamation point on the warning triangle is replaced with a lightning symbol.

Signal words at the beginning of a warning are used to indicate the type and seriousness of the ensuing risk if measures for minimizing damage are not taken.

- **NOTICE** indicates that minor damage to property may occur.
- **CAUTION** indicates possible minor to medium personal injury.
- **WARNING** indicates possible severe personal injury.
- **DANGER** indicates that fatal injury may occur.

Important information



Important information that presents no risk to people or property is indicated with this symbol. It is separated by horizontal lines above and below the text.

Additional symbols

Symbol	Function
▶	Sequence of steps
→	Cross-reference to other points in this document or to other documents
•	Listing/list entry
–	Listing/list entry (2nd level)

Table 1

1.2 Safety instructions

Safety instructions

Failure to observe the safety instructions can result in serious injury and a risk of fatal injury as well as damage to property and the environment.

- ▶ Read the safety instructions carefully prior to commissioning the system.
- ▶ Ensure that only a trained and certified contractor carries out installation, commissioning, maintenance and service.
- ▶ Ensure that the system is approved by the local jurisdiction.
- ▶ Clean and perform maintenance at least once a year. Check that the entire system functions properly at the same time. Immediately remedy faults.

Danger from failing to consider your own safety in an emergency such as a fire

- ▶ Never put yourself at risk of fatal injury. Your own safety must always take the highest priority.

Risk of damage from operator error

Operator errors can lead to injuries and/or damage to property.

- ▶ Ensure that only individuals who can operate this appliance correctly have access to it.
- ▶ Installation and commissioning as well as servicing and maintenance must be carried out only by a trained and certified contractor.

Installation and operation

- Have the appliance installed only by a qualified contractor.
- Ensure that the hot water tank is completely full prior to start up.
- To prevent damage from excess pressure, never disable the safety valves.
- Water may escape from the safety valve when water is being heated. Ensure that the safety valve is piped to within 6 inches of the ground in an area where property damage will not occur.
- Install the unit only in a frost-free room.
- Never store or place combustible material or liquids near the appliance.
- Maintain safe clearances in accordance with local/ national regulations.

Risk of fatal injury from electric shock

- If an aquastat is used with line voltage, it must be connected by a licensed electrician. The terminal wiring diagram must be followed.
- Before carrying out any work, isolate all phases of the electrical power using the emergency shut-off switch or by disengaging the heating system circuit breaker. Secure against unintentional reconnection.
- Do not install this device in rooms with a high moisture level (e.g. bathrooms, saunas).

Inspection/maintenance

- Recommendation: sign a maintenance and inspection contract with a qualified heating contractor and have the appliance serviced annually.
- The owner/operator is responsible for the safety and environmental compatibility of the system.
- Read and follow the safety instructions in the "Cleaning and maintenance" chapter.

Original spare parts

Damage caused by spare parts not supplied by the manufacturer are excluded from our warranty.

- Use only original spare parts and accessories from the manufacturer.

Frost damage

- When there is a risk of frost, drain the water from the DHW tank and the heating system's pipework. The system is protected from frost only if it is completely dry.

Instructing the owner/operator

- Instruct the owner/operator in the functionality and operation of the appliance.
- Inform the owner/operator that they must never carry out any modifications or repairs.
- Inform the owner/operator that children unsupervised by adults should never be in the vicinity of the heating system.
- Complete the commissioning report in this document and hand it over to the owner/operator.
- Give the technical documentation to the owner/ operator.

Disposal

- Dispose of packaging in an environmentally responsible manner.
- Dispose of the appliance correctly at an authorized disposal site.

Cleaning

- Clean the outside of the appliance with a damp cloth.

2 General points

2.1 Delivered condition

The DHW tank QWST120 O Is delivered as a fully assembled unit.

Additional components supplied with the tank:

1 125 psi P and T valve
3 3/4" brass couplings
1 3/4" brass tee
1 Honeywell L4006 adjustable differential tank aquastat
1 Aquastat mounting bracket and 4 mounting screws
3 Adjustable tank leg leveling bolts
1 Roll of high quality Teflon tape

2.2 Tank installation

Select a dry, frost free room for installation. The tank must not be allowed to freeze, or it must be drained or protected appropriately when not in operation. The floor must be level and able to carry the weight of the unit. When installing the heating boiler and DHW tank, observe the minimum clearance requirements for assembly and service (→ Fig. 1).

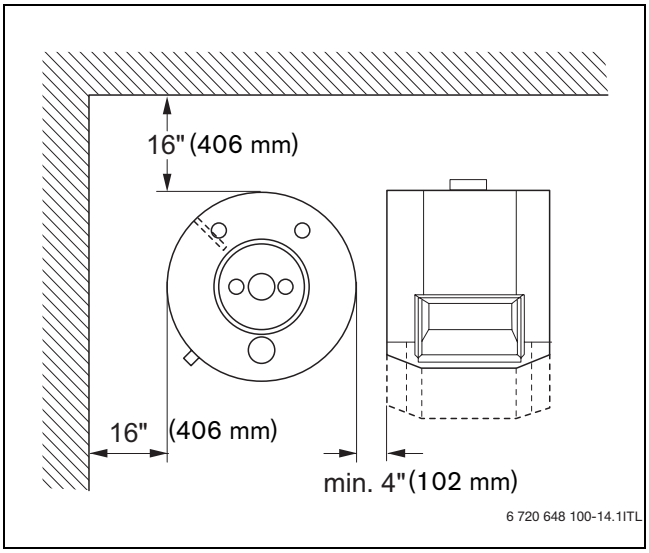

Fig. 1 Minimum space requirements for installation and maintenance

3 Moving the tank

NOTICE: Take care not to damage the tank when moving it.

- Observe the handling instructions on the packaging.
- Use suitable means of transportation, e.g. a hand truck with strap, to handle this product.
- Move this product upright.
- Prevent impact and shock.

The DHW tank can be moved by means of a hand truck (accessory, → Fig. 2) while still packaged or after removal of the packaging.

- Position the tank on the hand truck, secure with a strap if necessary, and transport safely to the installation location.
- Remove the strap.

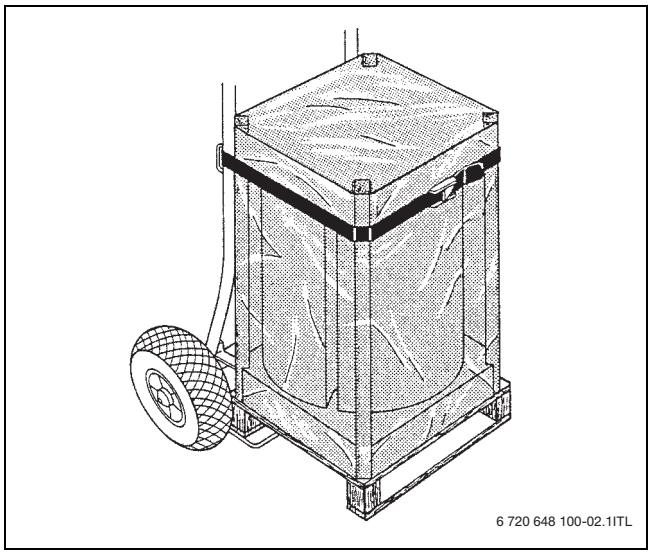

Fig. 2 Hand truck (illustrative)

- Remove the plastic wrapping.
- Remove the polystyrene cover pad and 4 wooden boards.
- Lay the polystyrene cover [1] on the ground and carefully lay the DHW tank [2] on its side.
- Remove bottom polystyrene pad and pallet. Install the adjustable feet M10 x 30 [3].

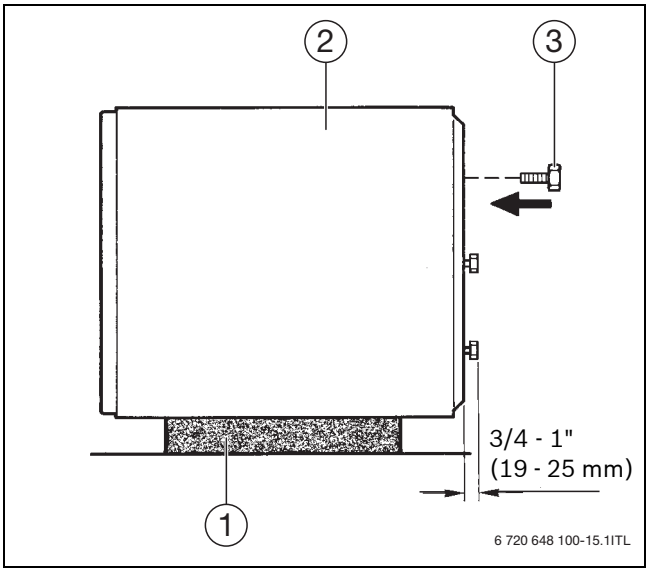

Fig. 3 DHW tank on polystyrene cover pad (illustrative)

1 Polystyrene cover pad
2 DHW Tank
3 Adjustable feet

- Place the DHW tank upright.
- Dispose of the DHW tank packaging in an environmentally responsible manner.

4 Dimensions and connections

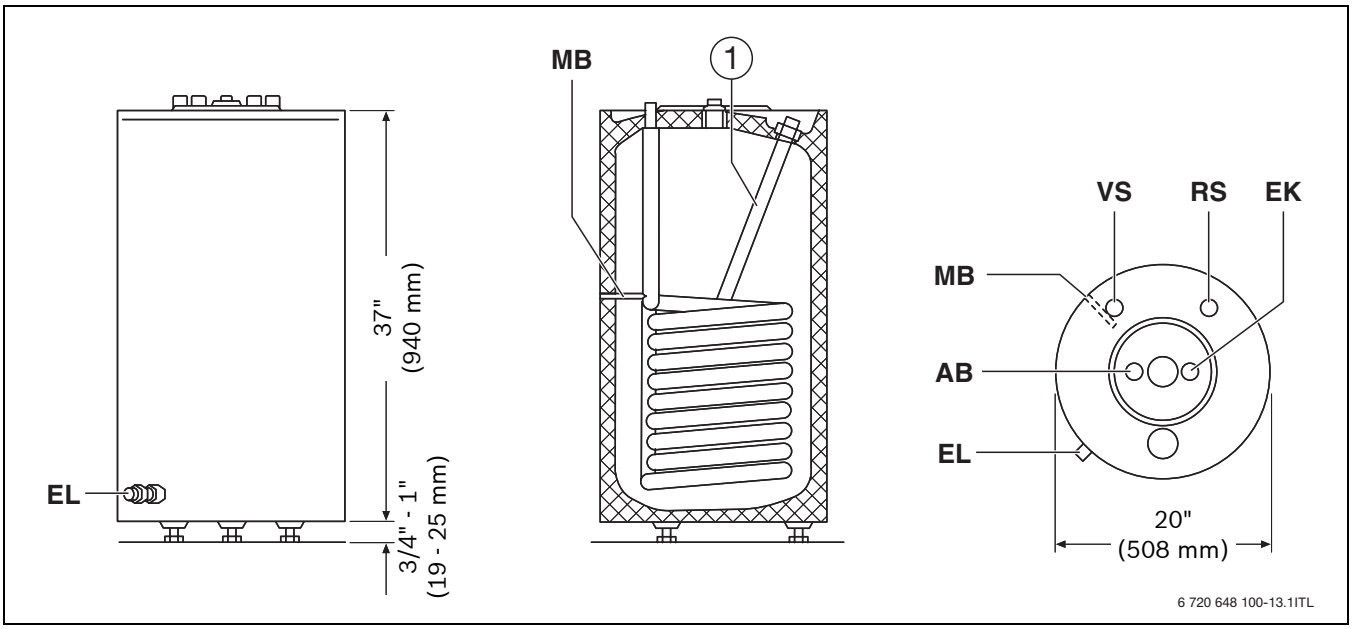

Fig. 4 Dimensions and connections

1 Magnesium anode
AB Hot water outlet
EK Cold water inlet
VS Tank coil supply
RS Tank coil return
MB Hot water temperature sensor or Aquastat
EL Drain

Type	VS	RS	EK/AB	Sacrificial anode	Weight (empty) Lbs (kg)
120	NPT ¾ "	NPT ¾ "	NPT ¾ "	G 1"	158 (72)

Table 2 Dimensions and connections

5 Installation

▸ Level the DHW tank by adjusting the feet (→ Fig. 5).

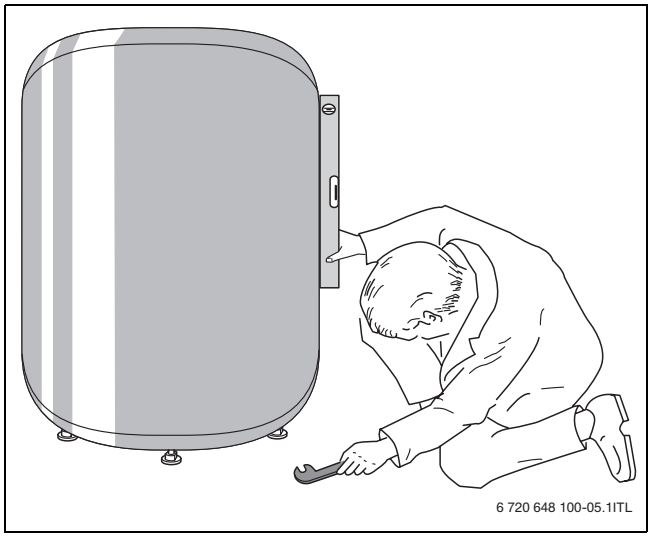

Fig. 5 Adjusting the feet (illustrative)

5.1 Safety limits

WARNING: Risk of damage to property and personal injury if temperature / pressure limits exceeded.

▸ For safety reasons, never exceed the following limits.

Maximum Temperature:

- Heating water (boiler) 230 °F (110 °C)
- Domestic water (DHW tank) 203 °F (95 °C)

Operating pressure:

- Heating water (boiler) 87 psi [1]
- Domestic water (DHW tank) 145 psi (10 bar)

5.2 Connections and fittings

It is the installer's responsibility to follow national and local code when installing this tank (→ Fig. 6).

▸ Connect all piping to the DHW tank by means of threaded fittings. For easy service and maintenance, each connection should be equipped with a shutoff valve. Install a drain valve [2] in the hot water pipe upstream and downstream of the shut-off valve [3]. Attach a tag with the following statement to the safety valve [4]: "Do not close drain line. During heating, water may be released for safety reasons."

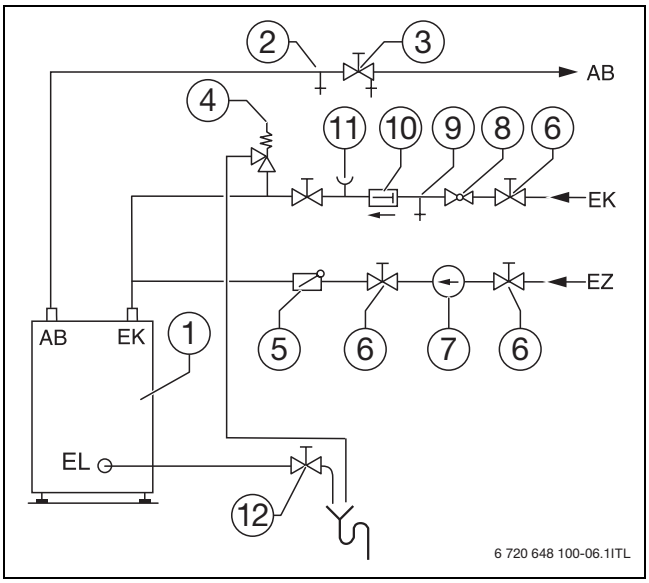

Fig. 6 Installation (illustrative)

1 Storage tank
2 Purge valve
3 Shut-off valve with drain
4 Pressure and temperature safety valve
5 Flow check valve
6 Shut-off valve
7 DHW recirculation pump (optional)
8 Pressure reducer (if required)
9 Purge valve
10 Backflow preventer
11 Pressure gauge connection
12 Drain
AB Hot water outlet
EK Cold water inlet
EZ Recirculation inlet
EL Drain

1. From the heating system, individual safety equipment required (safety valve, expansion vessel).

WARNING: Precautions must be taken prior to manually operating the relief valve to avoid contact with hot water being released and to prevent water damage.

WARNING: If a relief valve discharges periodically, this may be due to thermal expansion in a closed water supply system. Contact the installer to correct this situation. Do not plug the relief valve.

- A listed pressure and temperature relief valve (PTRV) must be installed at the time of installation. No valve is to be placed between the PTRV and the heater. No reducing coupling or other restriction may be installed in the discharge line. The discharge line must be a minimum of 6" (153 mm) above a drain and installed such that it allows complete drainage of both the PTRV and the line. The discharge line must be placed where it will not cause any water damage. The location of the PTRV must be readily accessible for servicing or replacement, and be mounted as close to the water heater as possible.
- Manually activate the TPRV annually to ensure proper operation. If the TPRV does not activate it must be replaced.
- Make sure that the installed pipework and connections are free of stress.
- Check all connections for leaks! Do not kink or twist hoses.

Safety valve

Only use approved and listed pressure and temperature relief valves of the proper size for the output of the tank.

Minimum connection diameter	Nominal capacity of the water chamber (gal)	Max. heating capacity [kBtu/hr]
3/4"	32 (120 liters)	255

Table 3 Safety valve

5.3 Temperature monitoring control options

Install a temperature sensor or an Aquastat on the DHW tank to measure and monitor the hot water temperature.

5.3.1 Installing the temperature sensor

- Feed the temperature sensor [2] with the spring [1] into the sensor well [3].

Ensure that the sensor surface has contact with the sensor well surface over its full length, and that it cannot accidentally be pulled out.

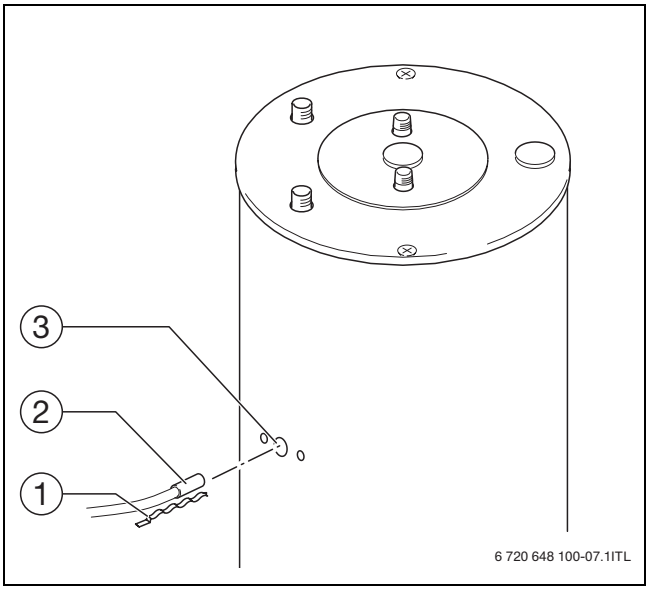

Fig. 7 Installing the temperature sensor

1 Spring clip
2 Temperature sensor
3 Sensor well

5.3.2 Installing the Aquastat

DANGER: Risk of fatal injury from electric shock.
- ▸ Disconnect all electrical power before working on the system.

- ▸ Remove cover from the Aquastat.
- ▸ If necessary, remove any unnecessary attachments. Attach bracket [3] to Aquastat [2] by means of 2 self-tapping screws [1].

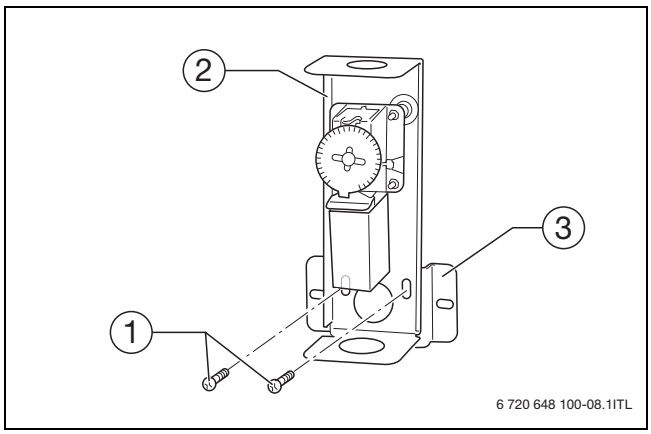

Fig. 8 Attaching the Aquastat to the bracket

1 Self-tapping screws C-ST 4.2x13 mm
2 Aquastat
3 Bracket

- ▸ Feed the temperature probe [4] with the spring [5] into the sensor well [3]. Ensure that the probe makes contact with the well wall over its entire length.
- ▸ Attach Aquastat [2] to the DHW tank by means of 2 self-tapping screws [1].

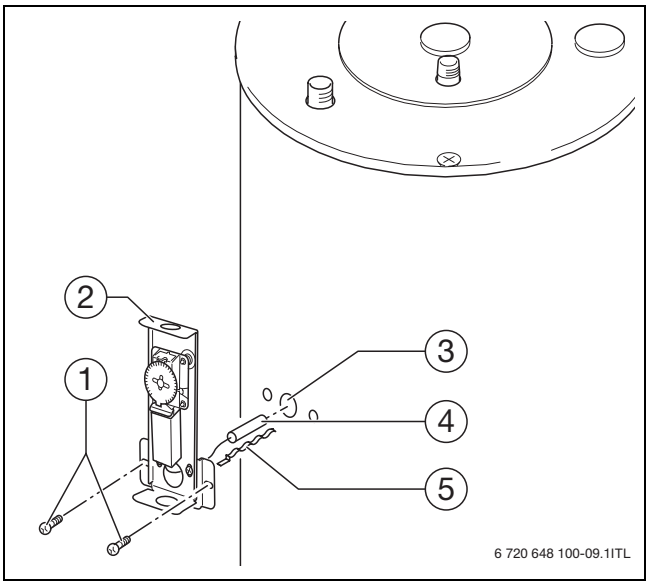

Fig. 9 Installing the Aquastat

1 Self-tapping screws C-ST 4.2x13 mm
2 Aquastat
3 Sensor well
4 Temperature sensor
5 Spring

Connect the electrical power and set the temperature as shown in the manual supplied with the Aquastat.

- ▸ Replace the cover of the Aquastat.

6 Commissioning



NOTICE: Risk of property damage in the event of improper operation!

Commissioning with a partially filled tank can destroy the appliance.

- ▶ Check that the DHW tank is completely filled and that fresh water can enter the tank.

Prior to commissioning, check for the following and ensure that systems are connected and operating properly:

- Absence of leaks in the heating system
- Absence of leaks in the pipework
- Verify all electrical connections
- Consult the operating instructions supplied with the control unit or boiler (standard delivery - control unit or boiler) for operating information.
- The system should be commissioned by the installer in the presence of the owner/operator.

7 Maintenance and cleaning

DANGER: Risk of fatal injury from electric shock.
- ▶ Only trained and certified electricians are permitted to carry out electrical work.
- ▶ Isolate the DHW tank electrically by using the emergency shut-off switch or by disengaging the heating system circuit breaker.
- ▶ Secure the DHW tank against unintentional reconnection.
- ▶ Please observe all installation instructions.

WARNING: Risk of equipment damage from improper maintenance!

Lack of maintenance or improper maintenance can result in damage or destruction of the DHW tank and voiding the warranty.
- ▶ Arrange for regular, thorough, and professional maintenance of the DHW tank.
- ▶ Protect electrical components and control units from water and moisture.

Use only original spare parts from the manufacturer or parts approved by the manufacturer.
Damage caused by spare parts not supplied by the manufacturer is excluded from our warranty.

- If not agreed to otherwise in writing, the DHW tank may be filled only with potable water.
- It is recommended that a qualified installer inspect and clean the DHW tank at regular intervals of not more than 2 years.
- In the event of poor water quality (hard to very hard water) in combination with high temperatures, inspection and cleaning should be carried out at shorter intervals.

7.1 Checking the magnesium anode

The anode rod must be inspected annually and replaced if compromised. Failure to operate the tank without a properly maintained anode rod may void the warranty.

DANGER: Risk of fatal injury from electric shock.
- ▶ Before working on the system, disconnect the electrical power.

- ▶ Close the cold water inlet (EK); open the tank's drain. To allow air into the system, open a fixture at a higher elevation than the drain valve.
- ▶ Remove the plastic plugs [1] from the magnesium anode [2] and inspection port.
- ▶ Unscrew the magnesium anode [2].

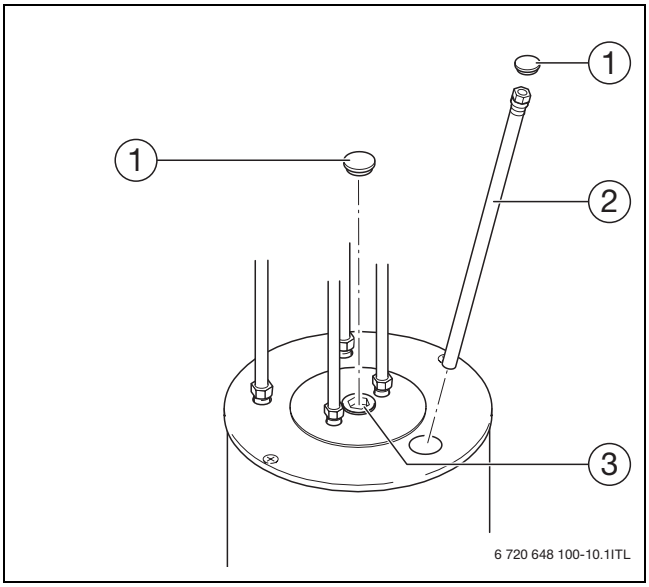

Fig. 10 Installing / removing the magnesium anode

1 Plug (24 mm socket)
2 Magnesium anode (27 mm wrench required)
3 Inspection port (plug, 24 mm socket)

Never bring the magnesium anode surface in contact with oil or grease. Ensure cleanliness.

- ▶ Check the diameter of the magnesium anode.
- ▶ If the diameter is reduced to about 1/2" (13 mm), the anode rod must be replaced.

7.2 Cleaning

- Unscrew the plug [1] from the inspection port.

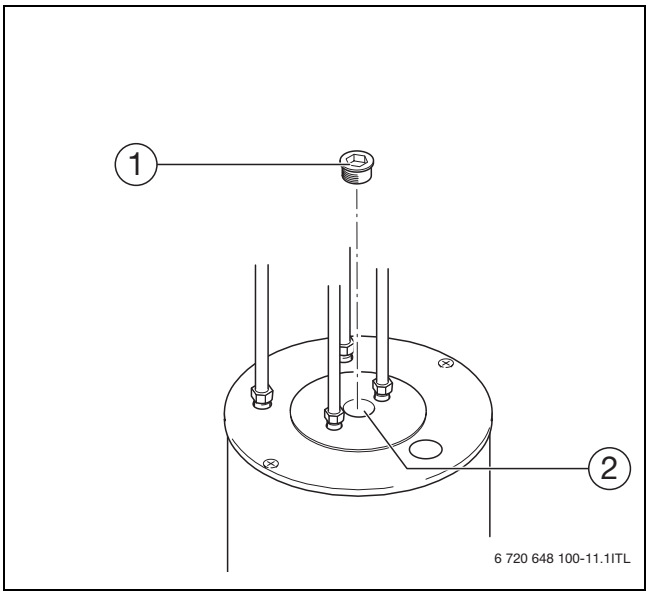

Fig. 11 Unscrewing the plug

1 Plug (24 mm socket)
2 Inspection port

NOTICE: Risk of physical damage to the DHW tank if limescale is broken up with sharp implements.

- Never break up limescale deposits with hard or sharp implements as this may damage the surface coating on the inside of the tank.

- Inspect and clean the interior of the tank.
- To clean the coil run the boiler to heat the coil, then spray down with cold water.
- Drain all debris from the tank.

7.3 Recommissioning after cleaning

- Seal the magnesium anode [2] back into place.
- Seal the plug [3] back into the inspection port.

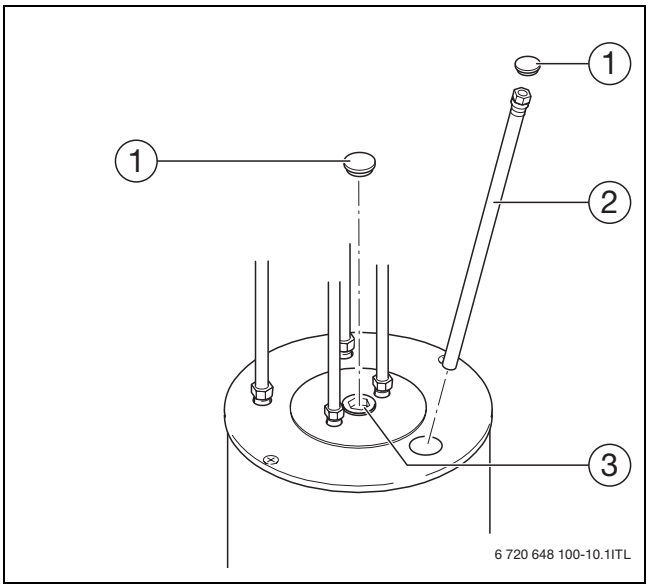

Fig. 12 Installing / removing the magnesium anode

1 Plastic plugs
2 Magnesium anode (27 mm wrench required)
3 Inspection port (plug, 24 mm socket)

- Start up the system again.
- Check all threaded connections for leaks.
- Install the plastic plugs [1] at the magnesium anode and inspection port.

8 Spare parts for QWST120 O

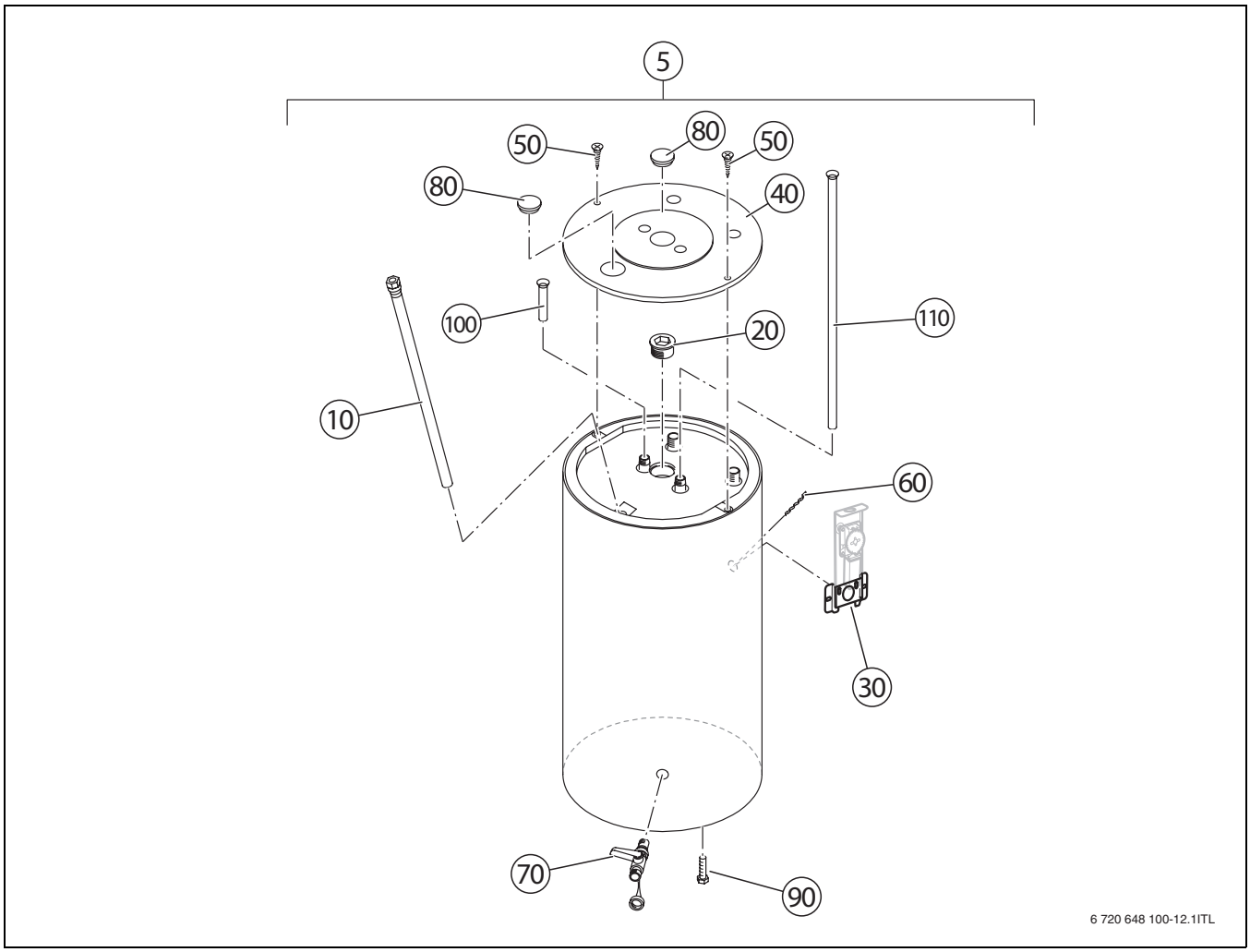

Fig. 13 Spare parts for QWST120 O

Item no.	Article description	Product No.	Number
5	DHW tank QWST120 O, complete	8 718 543 265	1
10	Magnesium anode D26 × 505 mm, G1"	87 185 713 470	1
20	Plug	63 004 276	1
30	Bracket for Aquastat	63 032 088	1
40	Casing lid, white	77 470 110 240	1
50	Self-tapping screw DIN 7981-C-ST6.3 × 19 - A3T	73 986	10
60	Spring clip	87 182 240 810	1
70	Fill & drain valve	87 185 433 400	1
80	Plastic plug, white	87 185 433 390	2
90	Hex-head bolt ISO 4017- M10 × 30 - 8.8 - A3K	7 747 022 050	1
100	Immersion pipe, 1-1/4" (31 mm) long	7 747 020 191	1
110	Immersion pipe, 32" (813 mm) long	7 747 020 190	1

Table 4 Spare parts available for the QWST120 O from Bosch

Notes

United States and Canada

Bosch Thermotechnology Corp.
50 Wentworth Avenue
Londonderry, NH 03053
U.S.A.
Tel. 03-552-1100
Fax 603-584-1681
www.bosch-climate.us

Bosch Thermotechnology Corp. reserves the right to make changes without notice due to continuing engineering and technological advances.

Original Quality by
Bosch Thermotechnik GmbH
Sophienstraße 30-32
D-35576 Wetzlar/Germany