

6 720 648 030-00.1T

Caution!

Observe the safety instructions of this installation and maintenance manual before placing the boiler in operation.

Danger!

If installation, adjustment, modification, operation or maintenance of the heating system is carried out by an unqualified person, this may result in danger to life and limb or property damage.
The directions of this installation and maintenance manual must be followed precisely.
Contact a qualified service company or service provider if support or additional information is required.

Caution!

The operating manual is a component of the technical documentation and must be handed over to the operator of the heating system.
Discuss the content of this manual with the owner or operator of the heating system to ensure that they are familiar with all information required for operation of the heating system. If the boiler will be installed in Massuchussetts, it must be installed by an installer or dealer who is registered there.

Low-temperature oil and gas-fired boiler

Bosch Uni 5000F US/CA 85/109/136

BOSCH

Installation and Service Instructions

6 720 648 160- 2011/05 US/CA

Contents

1 Safety Considerations and Symbol Descriptions 4
1.1 Regarding this Manual 4
1.2 Explanation of symbols 4
1.3 Observe the following Symbols 4
1.3.1 Installation Guidelines 5
1.3.2 Boiler Room Guidelines 5
1.4 Tools, Materials and Accessories 5
1.5 Disposal 5

2 Product description 6
2.1 Intended use 6
2.2 Certification and testing mark 6
2.3 Notes on installation and operation 6
2.4 Heating system water quality 6
2.5 Product description 6
2.6 Pack contents 7
2.7 Dimensions Specifications 8
2.7.1 Bosch Uni 5000F dimensions 8
2.8 Conditions for operation 9
2.8.1 General operating conditions 10
2.8.2 Conditions for the boiler room and the environment 10
2.8.3 Combustion air supply conditions 11
2.8.4 Conditions, Fuel 11
2.8.5 burner selection 11
2.8.6 Conditions power supply 12
2.8.7 Conditions for hydraulic system and water quality 12

3 Moving the boiler 14
3.1 Reducing boiler weight for transportation purposes 14
3.2 Lifting and carrying the boiler 14
3.3 Using transportation aids to transport the boiler 15

4 Installing the boiler 16
4.1 Wall clearances 16
4.2 Reversing boiler door 17
4.3 Mounting the adjustable feet (included with B-kit) 18
4.4 Positioning and leveling the boiler 18

5 Installing the boiler 19
5.1 Flue pipe installation 19
5.1.1 Chimney venting 19
5.2 Fitting the water connections 20
5.2.1 Fitting the B-kit 20
5.2.2 Installation of boiler drain (included in B-Kit) 21
5.2.3 Installing system components 21
5.3 Filling the heating system and checking for leaks 22
5.4 Mounting the burner 23
5.5 Connecting the fuel supply 23
5.6 Installing aquastat 23
5.7 Blocked vent switch (required in Canada) 23
5.8 Electrical connections 24
5.9 Fitting outer casing panels 24

6 Commissioning the heating system 25
6.1 Bringing the system up to operating pressure 25
6.2 Checking the safety valve 25
6.3 Checking position of heat exchanger baffles 26
6.4 Preparing the heating system for operation 26
6.5 Starting up the burner 26
6.6 Notes on commissioning the burner 26
6.7 Raising flue gas temperature 27
6.7.1 Adjusting the position of heat exchanger baffles 27
6.7.2 Removing heat exchanger baffles 27
6.7.3 Removing the heat exchanger barrier plate 28
6.8 Manual reset high limit (STB) 28
6.9 Installing the burner door jacket 28
6.10 Commissioning log 29

7 Shutting down the heating system 30
7.1 Shutting down normally 30
7.2 Shutting down the heating system in an emergency 30

8 Heating system servicing 31
8.1 Why is regular maintenance important? 31
8.2 Preparing the boiler for servicing 31
8.3 Cleaning the boiler 31
8.3.1 Cleaning the boiler with brushes 31
8.3.2 Wet cleaning (chemical cleaning) 32
8.4 Checking heating system operating pressure 32
8.5 Testing relief valve 33
8.6 Servicing and maintenance logs 34

9 Troubleshooting 37

10 Installation examples 38

11 Parts lists 40

12 Circuit diagrams 45

Index 53

1 Safety Considerations and Symbol Descriptions

1.1 Regarding this Manual

This document contains important information regarding safe and proper installation, operation and maintenance of the boiler.

The high tech Uni 5000F boiler is designated as a hot water heating boiler.

The Installation and Maintenance Instructions are directed to the installing contractor who has professional knowledge regarding boiler installation and maintenance.

1.2 Explanation of symbols



Warnings are indicated by a warning triangle and a grey background.

Signal words are used to indicate the seriousness of the ensuing risk if measures for minimising damage are not taken.

- Caution indicates that minor damage to property may occur.
- Warning indicates that minor personal injury or severe damage to property may occur.
- Danger means that severe personal injury may occur. Very serious cases may result in death.



Notes are identified in the text by this symbol. They are bounded by horizontal lines above and below the text.

Notes contain important additional information.

Notes do not contain any warnings or information about hazards or risks.

1.3 Observe the following Symbols

All applicable local, state, and national codes and regulations must be observed for the installation of the boiler:

- The local building code requirements regarding placement, combustion air and venting and chimney system must be followed.
- Follow applicable electrical code requirements.
- Follow the local code and standards regarding safe boiler operation.
- The technical rules of the gas suppply company regarding the connection of a gas burner to the gas system.



NOTICE
Use only original spare parts. Bosch can not be held liable for damage caused by non-Bosch parts.



NOTICE
Oil boilers: The boiler installation must be performed by a qualified installer in accordance with regulations put forth in NFPA-31 Installation of Oil-Burning Equipment. The installation must comply with all local and national codes, regulations and authorities having jurisdiction regarding the installation of oil fired boilers.

For Canada refer to the guidelines of CSA/ CGA-B139 Installation Codes.

Gas boilers: The boiler installation must be performed by a qualified installer in accordance with regulations put forth in ANSI Z223.1/NFPA-54, National Fuel Gas Code. In Canada the requirements of CAN/ CSA B149, Installation Code for Gas Burning Appliances and Equipment have be observed.

1.3.1 Installation Guidelines



CAUTION: DANGER TO LIFE
from electric shock.

- ▶ Do not work on electrical components unless you have the required qualification.
- ▶ Do not work on electrical components unless you have the required qualification.
- ▶ Prior to opening the control: shut down the power supply by turning off the emergency shut-off switch or disengaging the heating system circuit breaker, and prevent from accidental reactivation.
- ▶ Observe all applicable installation guidelines.



CAUTION: DANGER TO LIFE
from explosion of volatile gases.

- ▶ Work on gas components must be carried out by qualified and authorized personnel only.

1.3.2 Boiler Room Guidelines



CAUTION: DANGER TO LIFE
from explosion of volatile gases.
If you notic a smell of gas there is a risk of explosion.

- ▶ Extinguish all open flames.
- ▶ Do not smoke.
- ▶ Do not use lighting.
- ▶ Prevent sparks. Do not operate electrical switches , including telephones, plugs or doorbells.
- ▶ Close the main gas shut-off valve.
- ▶ Open windows and doors.
- ▶ Warn all occupants, but do not use doorbells.
- ▶ Call gas company from outside the building.
- ▶ If you hear gas escaping, immediately leave the building, prevent others from entering and notify police and fire brigade from outside the building.



CAUTION: DANGER TO LIFE
from flue gas poisoning.
Insufficient combustion air can result in dangerous operation if combustion air is taken from indoors.

- ▶ Please observe that combustion air openings are not reduced in size or closed.
- ▶ Make sure that no mechanical air openings or devices remove combustion air from the boiler room such as central vacuum systems, dryers and air conditioning appliances.
- ▶ Make sure that the boiler is connected to a chimney or horizontal venting system that is capable of handling the slight positive breeching pressure.
- ▶ If any of these problems have not been corrected, the boiler must not be operated.
- ▶ Make the end-user aware of these guidelines and their potential danger.



CAUTION: FIRE DANGER
due to flammable or liquid materials.

- ▶ Make sure that flammable and liquid materials are not stored in the close vicinity of the boiler.

1.4 Tools, Materials and Accessories

For the installation and maintenance of the boiler you will need typical tools used in this industry.
In addition, the following components are useful:

- Hand truck with strap or boiler cart.
- Wood blocking.
- Cleaning brushes and/or chemical cleaning agents for wet cleaning.

1.5 Disposal

- ▶ Please dispose of any trash in an environmentaly friendly fashion.
- ▶ Please discard properly of any heating system related components.

2 Product description

This installation and maintenance manual contains important information for the safe and intended installation, initial start-up and maintenance of this boiler.

The special oil or gas-fired boiler is generally referred to below as a boiler.

The installation and maintenance manual is provided for technicians who have been trained and have experience in working with heating systems and oil/gas fired installations.

2.1 Intended use

The Bosch Uni 5000F is designed for central heating and domestic hot water (DHW) systems, for instance in residential homes or apartment buildings, or small commercial applications.

2.2 Certification and testing mark

This appliance has been tested and certified to meet rules and regulations in place for the US and Canadian markets.

2.3 Notes on installation and operation

When installing and operating the heating system, it is the installer's responsibility to meet all applicable federal, state, and local codes.

2.4 Heating system water quality

Poor water quality can damage heating systems due to scale formation and corrosion.
Please refer to Chapter 2.8.7, Tab. 9 for further details of the water quality.

CAUTION: Risk of system damage due to unsuitable boiler water.

- If oxygen-permeable pipes are used, e.g. for radiant heating systems, the systems must be separated from the boiler by a heat exchanger. Unsuitable heating system water promotes sludge formation and corrosion. This can result in heating system malfunction and boiler damage.

2.5 Product description

The boiler is a low-temperature for oil or gas combustion appliance with automatic control panel or aquastat for boiler water temperature.

The boiler consists of:

- Boiler heat exchanger with insulation
- Boiler jacket
- Control panel or aquastat

The controls monitor and control all electrical boiler components.

The boiler can alternatively be fitted with a simple aquastat control.

The boiler jacket prevents heat loss and acts as a noise insulator.

The boiler heat exchanger transfers the heat generated by the burner to the heating water. The insulation prevents energy loss.

Suitable burners

CAUTION: Risk of system damage from use of incorrect burner.

- Only the burner provided may be employed with this boiler.

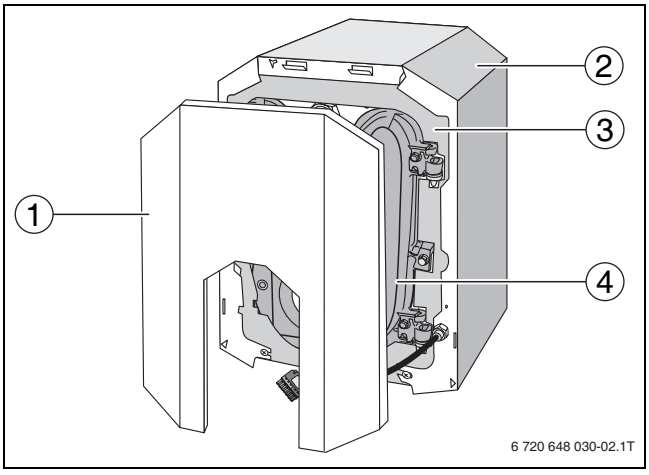

Fig. 1 Boiler without burner

1 Burner door panel
2 Boiler jacket
3 Boiler heat exchanger with insulation
4 Burner door

2.6 Pack contents

Upon delivery, check that the packaging is complete and undamaged.

Component	Qty	Packaging
Boiler heat exchanger	1	1 pallet
Boiler casing, factory-fitted to boiler heat exchanger		
Burner door and burner door panel, factory-fitted to boiler heat exchanger		
B-kit components: • 1 Supply manifold • elbow 90 ° 1 1/4" • elbow 90 ° 3/4" • double nipple R1 1/4"-1 1/4" NPT x 75 • boiler drain 3/4" • relief valve 3/4" x 3/4" 30PSI (2 bar) • temperature/pressure gauge • Bolt set B-Kit • adjustable boiler feet M10 x 51 packed	1	1 foil package [1)]
Controller or, alternatively, Aquastat[2)]	1	1 box
Technical documentation		1 foil package

Table 1 Package Contents

1) in the combustion chamber in the boiler

2) Aquastat may be supplied with burner

2.7 Dimensions Specifications

2.7.1 Bosch Uni 5000F dimensions

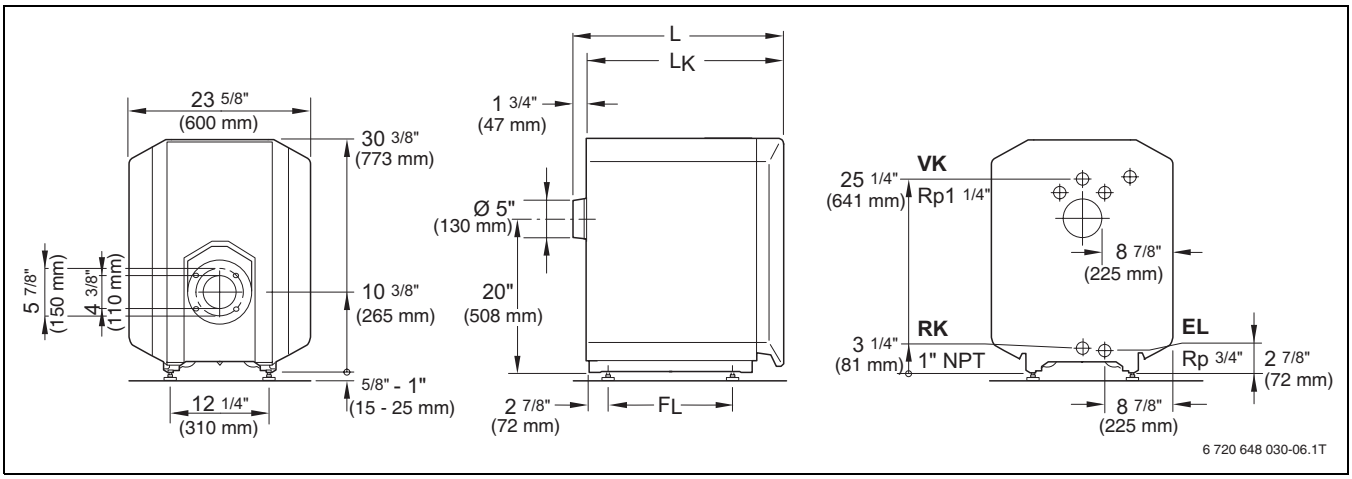

Fig. 2 Connections and dimensions (measurements in inches (mm))

VK = Boiler supply
RK = Boiler return
EL = Boiler drain (connection for drain valve)

Connections and dimensions:

Boiler model	Unit	Uni 85	Uni 109	Uni 136
Boiler sections		3	4	5
Heating capacity (gross output)	**MBtu/hr**	85	109	136
Oil chimney applications	**(kW)**	(25)	(32)	(40)
Thermal output (net IBR output)	**MBtu/hr**	74	95	119
Oil chimney applications	**(kW)**	(21)	(27)	(34)
Heating capacity (gross output)	**MBtu/hr**	74	98	120
Oil direct vent systems	**(kW)**	(21)	(28)	(35)
Thermal output (net IBR output)	**MBtu/hr**	64	85	104
Oil direct vent systems	**(kW)**	(18)	(25)	(30)
Boiler water content	**Gal**	8.7	10.8	12.9
	(l) [Liter]	(33)	(41)	(49)
Gas capacity	**cu.ft.**	1.20	1.75	2.21
	(l) [Liter]	(36.5)	(49.5)	(62.5)
Oil firing rate	**GPH**	0.7	0.9	1.1
chimney applications	**(kg/h)**	(2.2)	(2.9)	(3.5)
Oil firing rate	**GPH**	0.6	0.8	1.0
direct vent systems	**(kg/h)**	(1.9)	(2.6)	(3.2)
Maximum input rating	**MBtu/hr**	70	94	117
Gas chimney applications	**(kW)**	(21)	(28)	(35)
Flue gas back-pressure	**W.C.**	0.04" - 0.06"		
Oil chimney applications	**(Pa)**	(10 - 15)		
Flue gas back-pressure	**W.C.**	0.02" - 0.04"		
Oil direct vent systems and Gas chimney applications	**(Pa)**	(5 - 10)		

Table 2 Technical data for boilers without burners

Boiler model	Unit	Uni 85	Uni 109	Uni 136
Permissible flow temperature Safety[1)]	**°F**	230		
	°C	(110)		
Allowable operating pressure	**psi**	58		
	(bar)	(4)		
Maximum time constant of thermostat and high limit safety cut-out (STB)	**s**	40		

Table 2 Technical data for boilers without burners

1) Limit (safety temperature limiter, STB)
Maximum permitted flow temperature = Safety limit (STB) - 32 °F (18 K)
Example: Safety limit (STB) = 212 °F (100 °C),maximum permitted flow temperature = 212 ° (100 °C)- 32 ° (18 K) = 180 °F (82 °C)
The safety limit must meet the national regulations of the country concerned.

Boiler model	Unit	Uni 85	Uni 109	Uni 136
Boiler overall length (L)	**Inch**	23 5/8"	28 5/8"	33 3/8"
	(mm)	(601)	(728)	(848)
Boiler block length (L_K)	**Inch**	21 1/8"	25 ¾ "	30 ½ "
	(mm)	(536)	(656)	(776)
Combustion chamber length	**Inch**	16"	20 ½ "	25 ¼ "
	(mm)	(407)	(522)	(642)
Combustion chamber length	**Inch**	10 5/8"		
	(mm)	(270)		
Burner door thickness	**Inch**	3 5/8"		
	(mm)	(92)		
Distance between boiler feet (F_L)	**Inch**	10 3/8"	16 1/8"	20 7/8"
	(mm)	(290)	(410)	(530)
Net weight[1)]–	**lbs**	330	403	476
	(kg)	(150)	(183)	(216)

Table 3 Dimensions, weight and other data for boilers without burners

1) Incl. packaging material approx. 6-8 % more

2.8 Conditions for operation

Maintaining the specified operating conditions will enable the boiler to provide a high level of reliability and long service life.

CAUTION: Risk of system damage if operating conditions are not maintained.
Irreversible damage to individual components of the boiler as a whole or the heating system may occur.

- The information on the rating plate is binding and must be observed.

2.8.1 General operating conditions

Operating conditions			
Min. boiler water temperature	Operating interruption (complete boiler shutdown)	heating circuit with heating circuit mixing valve[1)]	Min. return temperature
In combination with control for variable low-temperature operating modes.			
If heating zones or a boiler circuit actuator cannot be regulated via the control device (for example pump logic), an operating temperature of 122 °F (50 °C)must be reached within 10 min of switching the burner ON by restricting the water volume flow.	Possible if, after interruption of the operation, there is at least 3 hours heating operation.	not required but recommended with low-temperature heating system design 130/113 °F (55/45 °C) Required with: • Underfloor heating systems • Systems with high water content: > 115° gal/MBH (> 15 l/kW) (1 MBH = 100.000 Btu/hr)	
In conjunction with a controls for constant boiler water temperatures or with supplementary external programmer and aquastat			
150 °F[2)] (65 °C[2)])	possible if, after interruption of the operation, there is at least 3 hours heating operation	required	Required with: • Systems with high water content > 115 gal/MBH: 130 °F (>15 l/kW: 55 °C)

Table 4 General operating conditions

1) A heating circuit with a mixing valve improves controllability and is specifically recommended for systems with several heating zones.

2) Boiler water temperature control setting: when the boiler is in ON mode, the minimum boiler water temperature in the boiler must be reached within 10 minutes, e.g. by flow rate limitation, and maintained as the minimum temperature.

2.8.2 Conditions for the boiler room and the environment

Operating conditions		Notes – Requirement in greater detail
Temperature in the boiler room	40 (+5 °C) to +104 °F (+ 40 °C)	
relative humidity	max. 90 %	No condensation or precipitation inside the boiler room
Dust/airborne particles	–	**Excessive dust inside the boiler room must be avoided when the boiler is operating, e. g.:** • Dust from building work **Combustion air supplied from outside must not be excessively loaded with dust or airborne particles; if necessary, air filters should be fitted in case**: • Air supply contaminated with dust from dirt roads and paths. • Air supply contaminated with dust from production and processing facilities, e. g. quarries, mines, etc. • Airborne particles from thistles and similar
Halogenated-hydrocarbon compounds	–	**The combustion air must be free from halogenated-hydrocarbon compounds.** • Identify the source of halogen-hydrocarbon compounds and seal it off. Where this is impossible, route combustion air from areas that are not contaminated by halogen-hydrocarbon compounds.
Fans that extract air from the boiler room.	–	During burner operation, no mechanical air handling equipment may be operated that could extract combustion air from the boiler room, e.g.: • Exhaust hood • Tumble dryer • Ventilation equipment

Table 5 Boiler room and ambient conditions

Operating conditions		Notes – Requirement in greater detail
Small animals	–	Prevent small animals from entering the boiler room, particularly through the air inlet vents – by fitting them with screens.
Fire safety	–	Maintain clearances between the boiler and flammable materials in accordance with local regulations. A minimum clearance of 16" (40 cm) is required. Never store flammable materials or liquids in the vicinity of the boiler.
Flooding	–	In case of an acute risk of flooding, disconnect the boiler in time from its fuel and power supply before water enters the room. Any components or control equipment, which came in contact with flood water, must be replaced before re-commissioning.

Table 5 Boiler room and ambient conditions

2.8.3 Combustion air supply conditions

Operating conditions	Boiler output (in case of multi-boiler systems = total output)	Ventilation air cross-section in square inches (unrestricted aperture)
Air intake flow cross-section for combustion air drawn from outside (divided between max. 2 apertures)	< 170,000 Btu/hr (< 50 kW)	At least 23.25 square inches (150 cm^2)

Table 6 Observe national regulations for boilers which draw their air supply from the boiler room.

If the burner is to be operated with sealed combustion by drawing its combustion air solely from the outdoors, follow burner manufacturer's specification.

2.8.4 Conditions, Fuel

Operating conditions		Notes – Requirement in greater detail
Permissible fuels for boilers without integral burners	–	This boiler can be operated with following fuels. Select a burner that is suitable for one of these fuel types: • Fuel oil in accordance with the burner specification. If a poorer quality oil (kinematic viscosity > 0.0093 sq in/sec (> 45.5 s Sayboldt) at 68 °F) is used, the maintenance and cleaning periods must be reduced. In that case, carry out maintenance and cleaning procedures at least twice a year. • Natural gas in accordance with the burner specification • LPG in accordance with the burner specification
Contamination	–	Free of contaminants (for example dust, mist, humidity), i. e. a constant operation will not lead to accumulation of deposits, in valves, strainers and filters and could lead to service calls.

Table 7 Fuels

2.8.5 burner selection

Oil burner

boiler size	burner manufacturer	burner model	Maximum Input Rating	nozzle	pump pressure
Uni 85	Riello	40F3	98 MBtu/hr (28 kW)	D 0.60 x 60 W H 0.60 x 60 W	145 Psi (10 bar)
Uni 109		40 F5	126 MBtu/hr (36 kW)	H 0.75 x 60 B D 0.75 x 60 B	225 Psi (15,5 bar)
Uni 136		40F5	154 MBtu/hr (45 kW)	D 0.90 x 60 W H 0.90 x 60 W	145 Psi (10 bar)

Table 8 Oil burner

boiler size	burner manufacturer	burner model	Maximum Input Rating	nozzle	pump pressure
Uni 85	Bekett	NX	98 MBtu/hr (28 kW)	D 0.60 x 60 W H 0.60 x 60 W	150 Psi (10,3 bar)
Uni 109		NX	126 MBtu/hr (36 kW)	H 0.75 x 60 B D 0.75 x 60 B	165 Psi (11,4 bar)
Uni 136		NX	154 MBtu/hr (45 kW)	D 0.90 x 60 W H 0.90 x 60 W	175 Psi (12 bar)
Uni 85	Carlin	EZ-1HP	98 MBtu/hr (28 kW)	D 0.60 x 60 W H 0.60 x 60 W	160 Psi (11 bar)
Uni 109		EZ-1HP	126 MBtu/hr (36 kW)	H 0.75 x 60 B D 0.75 x 60 B	210 Psi (14,5 bar)
Uni 136		EZ-1HP	154 MBtu/hr (45 kW)	D 0.90 x 60 W H 0.90 x 60 W	160 Psi (11 bar)

Table 8 Oil burner

direct vent Oil burner

boiler size	burner manufacturer	burner model	Maximum Input Rating	nozzle	pump pressure
Uni 85	Riello	40BF3	84 MBtu/hr (24 kW)	0.5 x 80 A	165 Psi (11,4 bar)
Uni 109		40BF3	112 MBtu/hr (32 kW)	0.65 x 60 W	175 Psi (12 bar)
Uni 136		40BF5	140 MBtu/hr (41 kW)	0.85 x 60 B	180 Psi (12,4 bar)

Table 9 direct vent Oil burner

Gas burner

boiler size	burner manufacturer	burner model	Maximum Input Rating	orifice		manifold pressure	
				natural	propane	natural	propane
Uni 85	Riello	40G120	70 MBtu/hr (21 kW)	1.70 mm	1.30 mm	1.50" WC (373.5 Pa)	1.30" WC (323.5 Pa)
Uni 109		40G200	94 MBtu/hr (28kW)	2.00 mm	1.30 mm	0.95" WC (236.5 Pa)	1.25" WC (311.5 Pa)
Uni 136		40G400	117 MBtu/hr (35 kW)	2.00 mm	1.30 mm	1.00" WC (249 Pa)	1.25" WC (311.5 Pa)

Table 10 Gas burner

2.8.6 Conditions power supply

Operating conditions		Notes – Requirement in greater detail
Power supply voltage	120 V AC nominal	Observe the voltage range of the burner and controls used. The outer casing/boiler must be grounded for safety reasons and in order to function correctly.
Circuit breaker	10 A	
Frequency	60 Hz	
Enclosure rating	–	IP 40 (protected against contact by entry of foreign objects > 0.04 inches Ø (> 1 mm Ø), no water proofing)

Table 11 Power supply

2.8.7 Conditions for hydraulic system and water quality

Operating conditions		Notes – Requirement in greater detail
Operating pressure (above atmospheric)	15 – 58 psi (1,0 - 4,0 bar)	Maximum 30 psi (2 bar) with the supplied safety valve.
Permissible site test pressure	45 – 75 psi (3,1 - 5,2 bar)	
Safety temperature limitation by TR temperature control	122 – 194 °F (50 - 90 °C)	
Safety temperature limitation by manual reset high limit (STB)	212 – 248 °F (100 - 120 °C)	On some controls adjustable on site from 212 (100 °C) to 248 °F (120 °C).
Water quality	–	The heating system may only be filled and topped up with water of domestic water quality. We recommend a pH value of 8.2 – 9.5.

Table 12 System configuration and water quality

3 Moving the boiler

This chapter details how to move the boiler safely.

CAUTION: Risk of system damage from impact.
Fragile components could be damaged.
- Observe the transport instructions on the packaging.

Protect boiler connections from damage and dirt if the boiler is not installed immediately.

Dispose of packaging in an environmentally responsible manner.

3.1 Reducing boiler weight for transportation purposes

If required, you can reduce the weight of the boiler by removing the burner hood and door.

- Unscrew the burner door-panel screws.
- Lift burner door panel slightly and draw forward to remove.

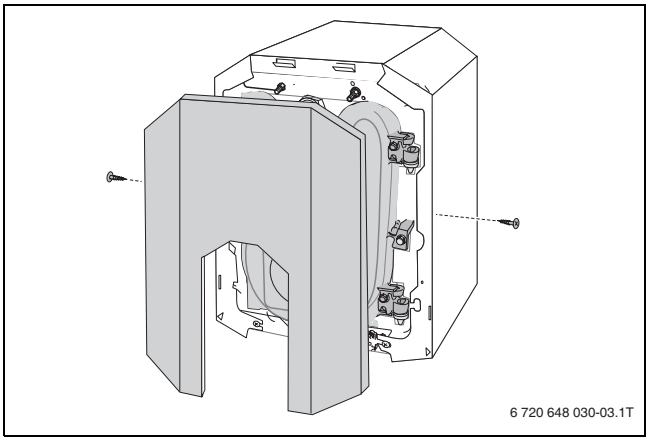

Fig. 3 Removing burner door panel

Prevent the burner door from falling over and damaging the burner and blast tube.

- Unscrew two hex-head bolts at the sides.
- Open burner door.
- Lift the burner door off its hinges.

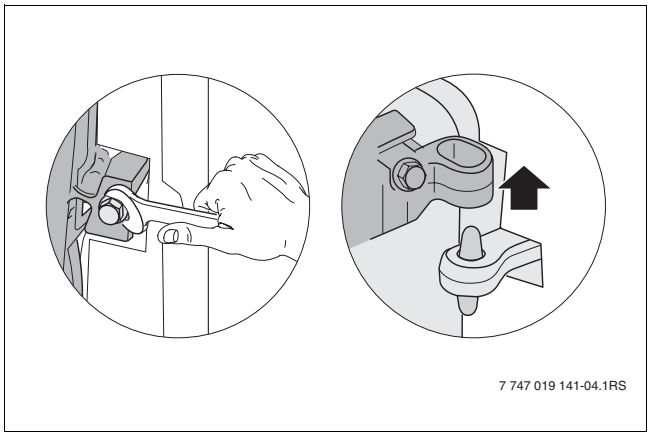

Fig. 4 Removing the burner door

3.2 Lifting and carrying the boiler

The boiler is secured to the pallet by 2 screws for transportation purposes.

The boiler can be held and carried at the grip positions shown.

- Undo the transit screws.

CAUTION: Risk of injury from carrying heavy loads.
- Always lift and move the equipment with the assistance of another person using the handle positions shown.

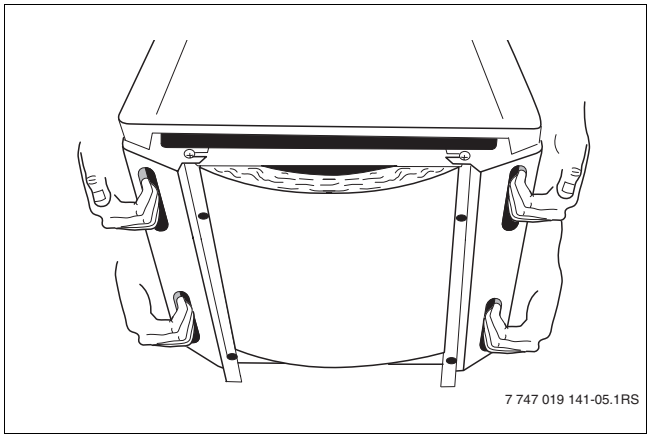

Fig. 5 Lifting and carrying the boiler

3.3 Using transportation aids to transport the boiler

CAUTION: Risk of injury if load is inadequately secured during transportation.

- Use suitable means of transportation, e.g. the Bosch boiler hand truck with strap.
- Secure the load against falling.

You can order the boiler hand truck from your Bosch distributor.

Moving the boiler with hand truck

- Place the hand truck (e.g. boiler trolley or sack truck) at the back of the boiler.
- Secure boiler to hand truck using the boiler bolts or strapping.
- Move the boiler to the installation location.

The boiler trolley can also be used to facilitate work underneath the boiler, e.g. fitting the adjustable feet (→ Chapter 4.3, page 18).

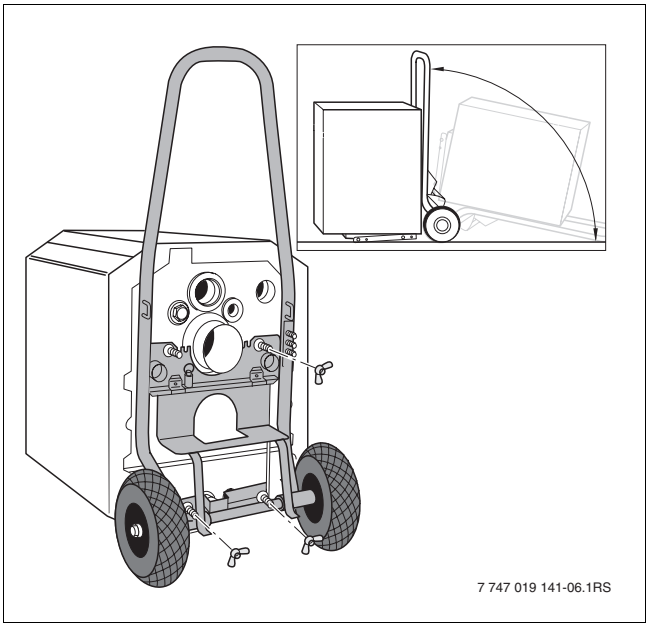

Fig. 6 Moving the boiler with a boiler hand truck

4 Installing the boiler

This chapter describes how to install and place the boiler in the boiler room.

CAUTION: Risk of system damage from freezing.

- Install the heating system in a frost-free room.

4.1 Wall clearances

Position the boiler with the recommended wall clearances. Reducing the minimum clearances makes the boiler more difficult to access during installation, maintenance and cleaning.

The boiler base or foundation must be perfectly flat and level.

The burner door is factory-fitted with the hinges on the right. The burner door can be converted to open to the left (Chapter 4.2, page 17).

Dimension	Wall clearance	
A	Recommended	51 1/8" (1300 mm)
	minimum	39 3/8" (1000 mm)
B	Recommended	27 ½ " (700 mm)
	minimum	15 ¾ " (400 mm)
C	Recommended	15 ¾ " (400 mm)
	minimum	3 7/8" (100 mm)

Table 13 Recommended and minimum wall clearances (dimensions in inches).

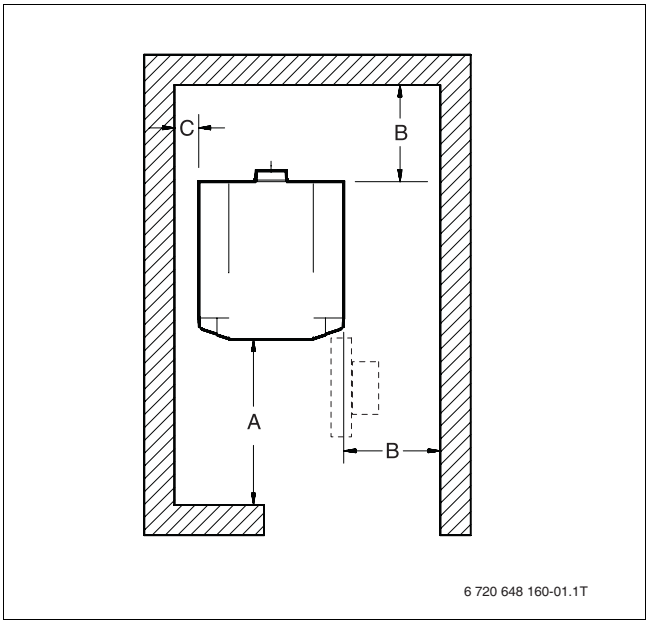

Fig. 7 Boiler room clearances (boiler positioned on the l.h. or r.h. side)

The boilers are designed for a side clearance of 6" (150 mm).
Where applicable, allow extra wall clearances for additional components such as DHW tank, pipe connections, flue gas silencer or other flue components, etc.

CAUTION: Risk of fire from flammable materials or liquids.

- Clearances less than 6" (150 mm) must comply with local and statutory codes.
- Make sure that there is a sufficient clearance between combustible materials and the chimney connection as specified by NFPA 31 (distance of 18 " (460 mm)).
- The floor must comply with the requirements of NFPA 31.

4.2 Reversing boiler door

The burner door is factory-fitted with the hinges on the right – the burner door opens to the right.You can change the burner door hinges over to the left-hand side if desired to suit the installation site.

Remove the burner hood/burner door panel first (→ Chapter 3.1, page 14).

- Removing the burner door (→ Chapter 3.1, page 14).
- Unscrew the hinge bolts and remove the hinges.
- Mount the hinges on the left-hand side of the boiler using the hinge bolts.

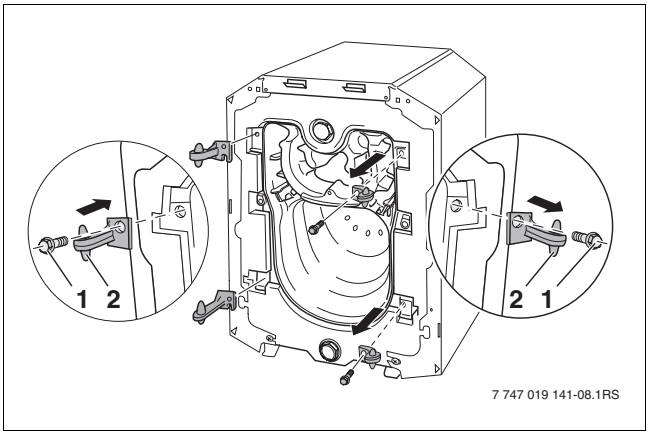

Fig. 8 Reversing the burner door (boiler heat exchanger attachments)

1 Hinge bolts
2 Hinges

- First remove the hinge lobe bolts and then the hinge lobes. Mount the hinge barrels on the left-hand side of the boiler using the hinge-barrel bolts.
- Hook the burner door with the hinge lobes onto the hinges.
- Check that the heat exchanger baffles are placed horizontally (→ Chapter 6.3, page 26).
- Close the burner door and secure with the two hexagon-head bolts.Tighten the hexagon-head bolts evenly (approx. 90 Lbs/inch (10 Nm)) so that the burner door seals properly.

If the burner door hinges have been changed over to the left-hand side, the burner cable must be disconnected from the burner before opening the burner door.

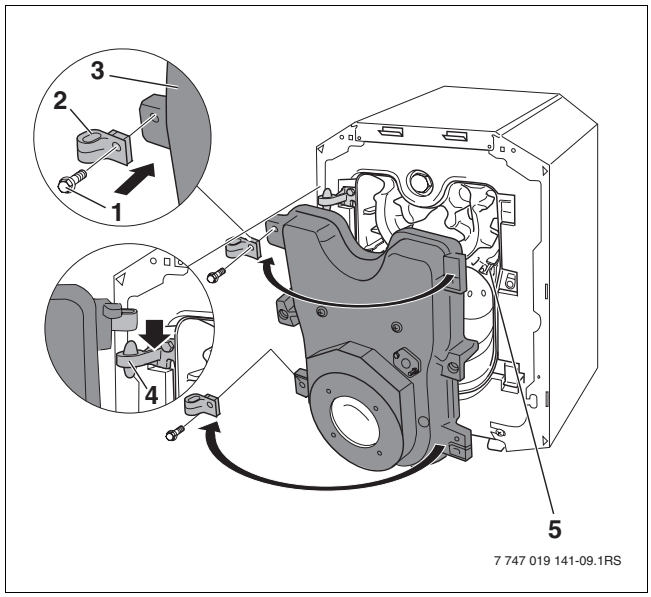

Fig. 9 Reversing the burner door (door attachments)

1 Hinge-barrel bolts
2 Hinge lobes
3 Burner door
4 Hinges
5 Heat exchanger baffle plates

4.3 Mounting the adjustable feet (included with B-kit)

Level the boiler with the adjustable feet to prevent air pockets forming inside the boiler.

Requirement: the burner hood/burner door panel must have been removed first (→ Chapter 3.1, page 14).

If the boiler is mounted on top of a horizontal hot water tank, the adjustable feet are not needed.

- Tilt the boiler with the aid of a hand truck or trolley (→ Chapter 3.3, page 15) or place a wooden batten underneath it.
- Screw in adjustable feet ¼ " – 3/8" (6 - 10 Nm).
- Gently set the boiler down.

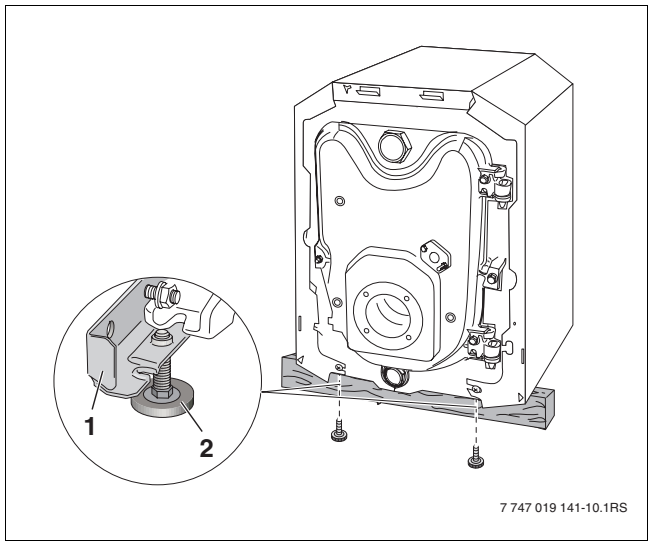

Fig. 10 Fitting adjustable feet

1 Angle bracket
2 Adjustable feet

4.4 Positioning and leveling the boiler

- Position the boiler in its final location.
- Level the boiler horizontally by turning the adjustable feet and using a level.

Protect boiler connections from damage and dirt if the boiler is not installed immediately.

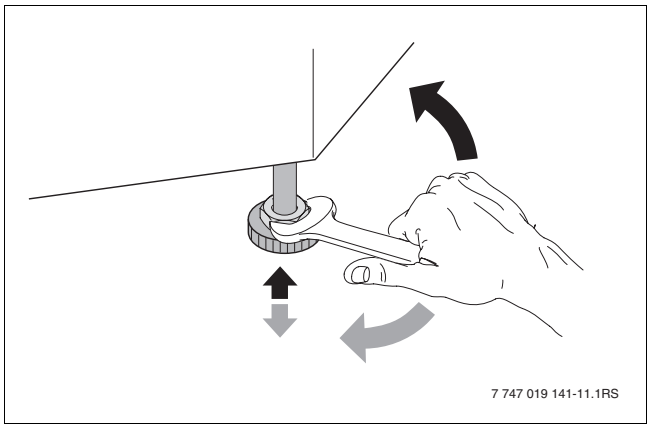

Fig. 11 Leveling the boiler horizontally

5 Installing the boiler

This chapter details how to install your boiler correctly. The individual steps involved are:

- Connecting the flue
- Connecting the water pipes
- Making the electrical connections
- Fitting the burner
- Connecting the fuel supply

5.1 Flue pipe installation

5.1.1 Chimney venting

Connect boiler to vertical chimney with a 5" (130 mm) vent pipe. Use only venting systems that comply with local codes and regulations.

For oil boilers:

If local codes are not existent, refer the the following regulations:

- NFPA 31, Installation of Oil-Burning Equipment,
- NFPA 211, Standard for Chimneys, Fire Places and Solid Fuel Burning Appliances,
- In Canada refer to CSA B139, Installation Code for Oil-Burning Equipment,
- NFPA 211 requires chimney to be lined before connecting boiler.

For gas boilers:

If local codes are not existent, refer the the following regulations:

- ANSI Z223.1/NFPA-54, National Fuel Gas Code.
- In Canada refer to CAN/CSA B149, Installation Code for Gas Burning Appliances and Equipment.

Inspecting and cleaning existing flue

Before installing the new boiler, check and clean the old flue system.

- ▶ Remove blockages and dirt from the chimney.
- ▶ Clean chimney.
- ▶ Repair or replace faulty sections.
- ▶ If necessary, repair chimney with mortar and joints.

Down drafts

To prevent down drafts extend chimney at least 3 feet (0,9 m) above the roof opening and at least 2 feet (0,6 m) above any part of the roof within a radius of 10 feet (3 m).

Minimum clearances to combustible material

Flue pipe	Type	Minimum clearance
Double-wall	L	6" (150 Nm)
Single-wall	L	18" (460 Nm)

Table 14 Minimum clearances to combustible objects for flue systems

Minimum size of chimney

The minimum recommended chimney size is 8" x 8" (200 mm x 200 mm)
(6 ¾ " x 6 ¾ " inside liner (170 mm x 170 mm) or 6" (150 mm) diameter with a minimum height of 15 feet (4,5 m). Use a 5" (130 mm) flue pipe for connection to an existing chimney.

Installing the flue pipe

DANGER: Risk of death from escaping flue gases.

If the resistance to flue gas flow is too great and/or the flue pipe diameter is smaller than the recommended size and/or the flue pipe is too short:

- ▶ Seal all vent pipe joints.
- ▶ Install a CO alarm. Positive pressure combustion ensures that the flue gas can exit the flue system.

- ▶ Insert flue pipe 5" (130 mm) onto the breach and secure with 3 screws.

Avoid long horizontal flue pipe runs and keep the number of elbows to a minimum.

- ▶ Install flue connections between boiler and chimney to slope up at least ¼ " (6 mm) per foot (0,3 m) to the chimney.
- ▶ Connect the flue pipe to the chimney above the bottom of the chimney to prevent blockages.
- ▶ Install cleaning and service hatches.

After starting the burner, set breeching draft to -0.01 to -0.02 inches WC (2.5 Pa - 5 Pa) using a draft gauge. The overfire pressure can be positive. If necessary, install a barometric damper in the flue system to maintain the underpressure in the system or to meet code requirements. Always install the draft controller in vertical position. Use a draft gauge when making adjustments.

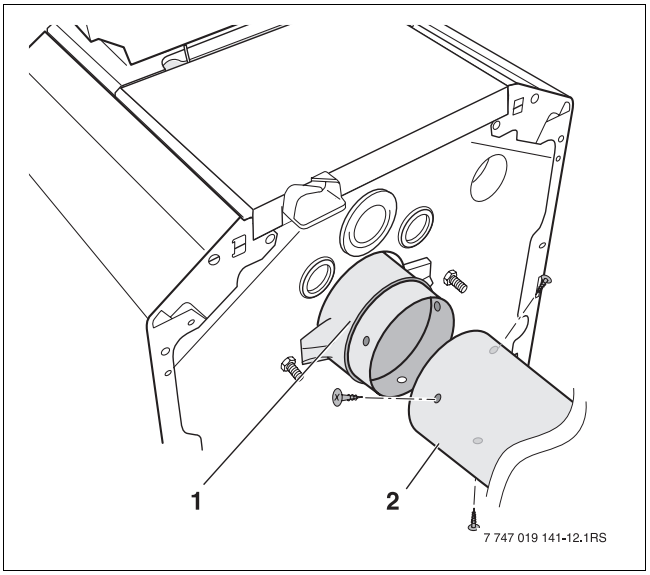

Fig. 12 Installing the flue pipe

1 Flue pipe
2 Boiler flue socket

5.2 Fitting the water connections

CAUTION: Risk of system damage from leaking connections.

- Support the pipes to the boiler to prevent them from being under stress.

5.2.1 Fitting the B-kit

The safety relief valve and the pressure/temperature gauge are mounted on the supply manifold (included in B-Kit) on the VK boiler supply connection as follows:

- Fit and seal unmarked end of double nipple into connection VK on the boiler.
- Converter is paint-marked pink and stamped with the designation NPT on the end with the 1¼ " NPT thread.

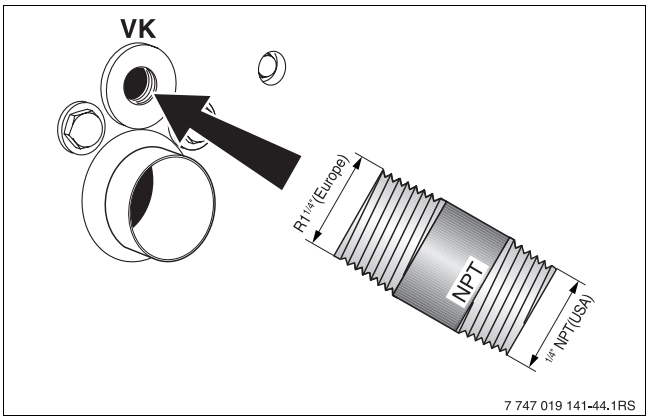

Fig. 13 Checking thread length on double nipple

- Seal 90° 1¼ " NPT street elbow on double nipple.
- Fit and seal manifold to 90° elbow. The manifold can face in different directions (→ Fig. 14).

Do not fit the safety valve until the leak test (→ Chapter 5.3, page 22) has been completed.
The relief valve must be installed in a vertical position.

- Seal pressure/temperature gauge to supply manifold.

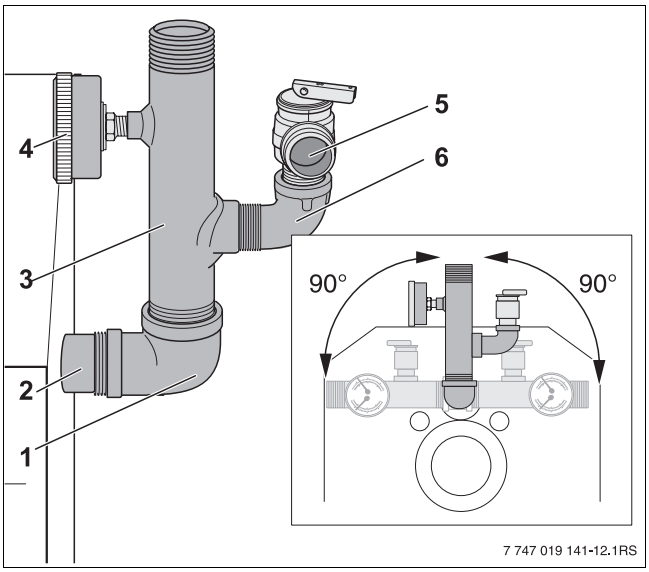

Fig. 14 Installing B-Kit

1 90° 1¼ " NPT street elbow
2 Double nipple
3 Supply manifold
4 Pressure/temperature gauge
5 Pressure relief valve
6 90° ¾ " NPT elbow

We recommend installing a dirt filter (optional) in the boiler return connection to reduce build-up of debris on the water side.

5.2.2 Installation of boiler drain (included in B-Kit)

▸ Seal boiler drain to connection EL.

Install a fill connection in the supply piping to the boiler.

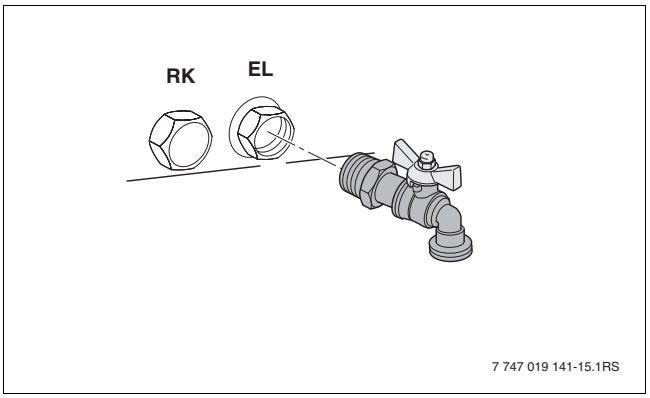

Fig. 15 Installation of boiler drain

RK Return
EL Drain

5.2.3 Installing system components

See the installation diagram for installation of the heating system components.

For more installation examples refer to → Chapter 10, page 38.

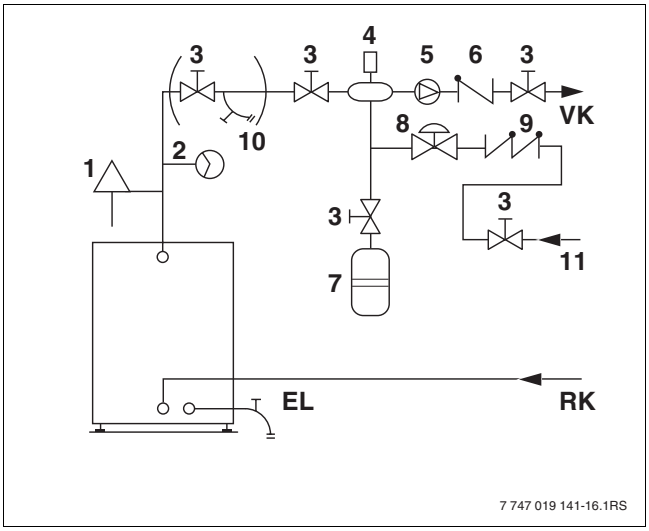

Fig. 16 Installation diagram

1 Pressure relief valve
2 Pressure/temperature gauge
3 Ball or stop valve
4 Air eliminator (in main supply)
5 System pump
6 Flow check valve
7 Expansion tank
8 Automatic feed valve
9 Flow check valve
10 Purge station
11 Water feed
VK Boiler supply
EL Drain
RK Return

5.3 Filling the heating system and checking for leaks

The boiler is tested for leaks at the factory. Before putting the heating system into operation, it must be checked to ensure that no leaks will occur during operation.

CAUTION: Risk of system damage from excess pressure when testing for leaks.

Pressure, control and safety equipment may be damaged by excessive pressure.

- When you carry out a leakage test, make sure that no pressure, control or safety equipment that cannot be isolated from the boiler water chamber is fitted.

CAUTION: Risk of damage to system due to temperature stresses.

If you fill the heating system when it is hot, the resulting temperature stresses can cause stress cracks. The boiler will then leak.

- Only fill the heating system when cold (the flow temperature should be no more than 100 °F (37 °C)).
- Pay attention to the water quality as specified in the operator's log, and record the volume and quality of the water used to fill the system.

Carry out the leak test at 1.5 times the standard operating pressure and in accordance with the codes.

Maximum operating pressure	Maximum on-site testing pressure
30 psi (2 bar) (with safety valve supplied)	45 psi (3,1 bar)
58 psi (4 bar) (with 50 psi (3,5 bar) relief valve)	75 psi (5,2 bar)

Table 15 Maximum testing pressure

- Seal pressure relief valve connection (→ Fig. 14 "Installing B-Kit", page 20) and all other open connection with blind plugs.
- Isolate the expansion tank from the system by closing the valve.
- Open the mixing and shut-off valves on the heating water (primary) side.
- Slowly fill the boiler with tap water.

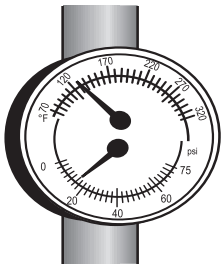

Fig. 17 Pressure/temperature gauge

CAUTION: Health risk from contaminated domestic water.

- Always observe the regulations and standards applicable in your jurisdiction for the prevention of contamination of drinking water (e.g. by water from heating systems).

- Open the cap of the automatic air vent by one full turn to allow air to escape.
- Slowly fill the heating system. Observe the pressure gauge whilst filling.
- Check the connections and pipework for leaks.
- Bleed the system via the radiator bleed valves if applicable.
- Top with water if the pressure drops as a result of bleeding the system.
- Installing pressure relief valve (→ Fig. 14 "Installing B-Kit", page 20)

5.4 Mounting the burner

Only burners that comply with the boiler specification can be used with this boiler. (→ Chapter 2.7, page 8).

CAUTION: Risk of system damage from use of incorrect fuel.

- Only use burners which meet the technical boiler requirements.

- Screw studs included with the B-Kit to the burner door.

Approved burners with accessories (such as aquastat and circulator) are also available as a package from Bosch.

- Install burner with the correct nozzle and settings (air, pump pressure, turbulator settings, flange position).
- Place the seal on the studs and secure the burner with the included nuts.

For details of the correct burner settings
→ flue system documentation and
→ burner documentation.

- Follow the manufacturer's direction for installation, fine adjustment and regular maintenance procedures.

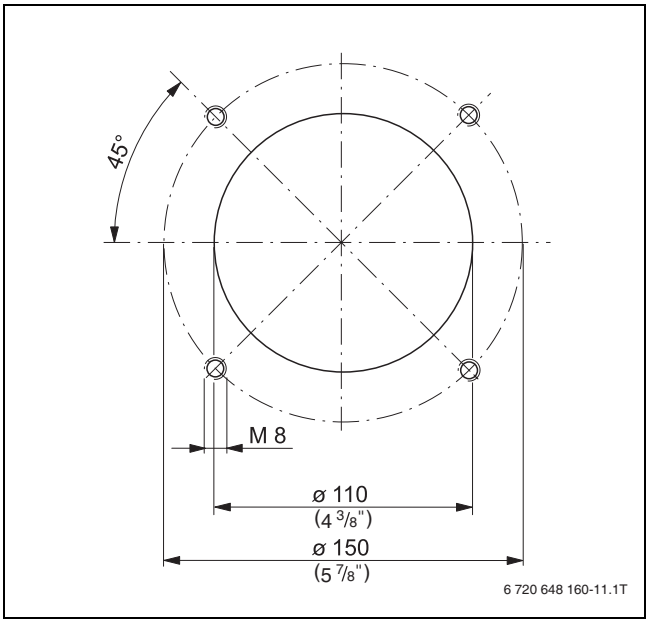

Fig. 18 Burner door mounting holes

5.5 Connecting the fuel supply

Make the fuel connection in accordance with all applicable local and national codes and regulations. We recommend fitting a fuel filter and de-aerator for oil boilers.

- Visually inspect the fuel pipe and clean or replace, if necessary.
- Install a shut-off valve into the fuel supply pipe.
- Connect the fuel pipe free of stress to the boiler.
- Check the fuel line for leaks.

5.6 Installing aquastat

An aquastat controls the boiler supply temperature.

- Install aquastats in the sensor well as specified by the installation manual.

For operating the boiler with aquastat → Chapter 6, page 25.

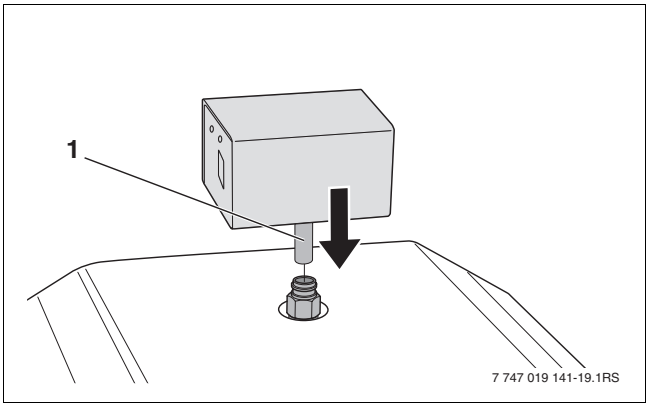

Fig. 19 Aquastat installation

1 Immersion sleeve

5.7 Blocked vent switch (required in Canada)

For Canadian installations fit a blocked vent switch per the vent switch manufacturer's instructions and as close as possible to the boiler breach.

See wiring diagrams.

5.8 Electrical connections

DANGER: Risk of death from electric shock.

- Electrical work may only be carried out by qualified technicians. Before opening any electrical equipment, isolate it from the power supply by turning off the emergency shut-off switch or disengaging the heating system circuit breaker, and prevent from accidental reactivation. Follow the installation instructions.

- Remove rear boiler jacket.
  - Unscrew the fixing screws.
- Remove cover panel. Wiring from the control panel/ aquastat to the burner is passed through the hole in the front boiler top panel.

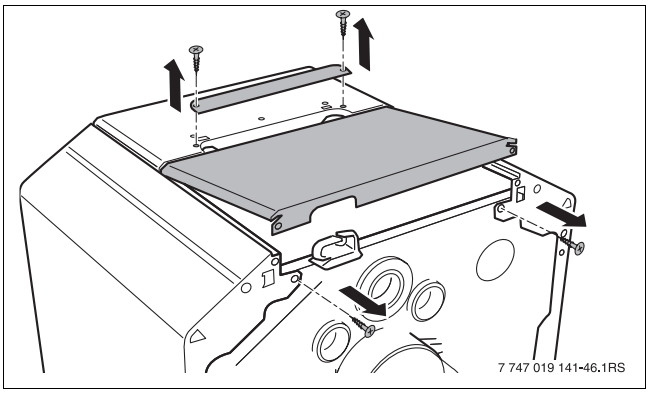

Fig. 20 Removing rear boiler cover and cover plate.

For details of the correct writing see aquastat/control documentation.

5.9 Fitting outer casing panels

- Fit the rear boiler cover.
- Secure by reinstalling cover screws and jacket panel screws.

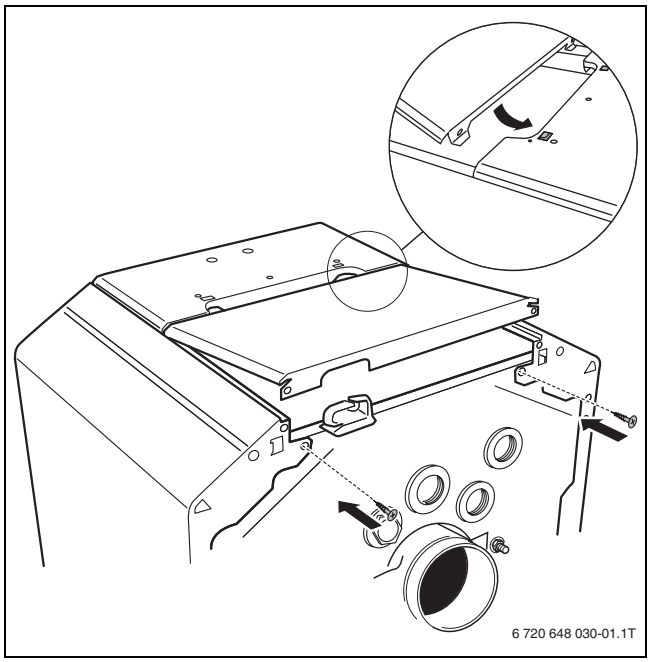

Fig. 21 Fitting the rear boiler cover

6 Commissioning the heating system

This chapter describes the initial start-up procedure regardless of the installed control device.

- Complete the start-up protocol during this process (→ Chapter 6.10, page 29).

Further information on boiler room layout and clearances, combustion air requirements and venting systems and boiler operational requirements can be found in
→ Chapter 2.8, page 9.

CAUTION: Risk of boiler damage from excessive dust and airborne particle levels.
- Do not operate the boiler when there is a lot of dust in the boiler room, e.g. due to construction work.
- Install an air filter if the combustion air supply is very dusty (e.g. due to dirt roads and paths or dust-generating working environments such as quarries, mines etc.) or contains airborne seeds from composite plants.

6.1 Bringing the system up to operating pressure

Bring the system up to the normal operating pressure before commissioning.

CAUTION: Risk of damage to system due to material stresses caused by temperature differentials.
- Only fill the heating system when cold (the flow temperature should be no more than 100 °F (37 °C)).

- Top up the heating water or drain via the boiler drain valve until the required operating pressure has been reached: minimum 15 psi (1 bar), maximum 30 psi (2 bar) pressure.
- Bleed air from the heating system while filling.

6.2 Checking the safety valve

- Make sure that no persons are in the discharge area of the pressure relief valve.
- Raise the lever on the pressure relief valve.

The pressure relief valve must open and release pressure. If the pressure relief valve does not discharge, it must be replaced, because system components can be damaged by excessive pressure.

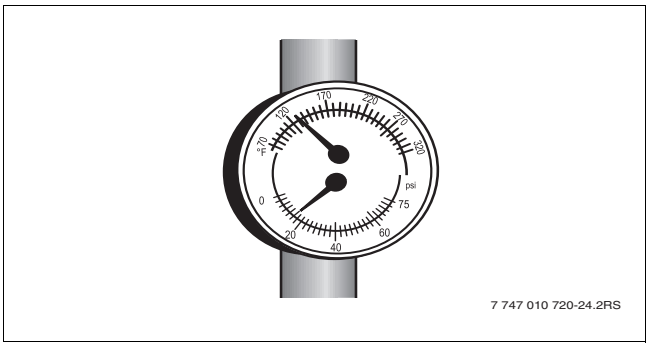

Fig. 22 Pressure/temperature gauge for showing operating pressure and supply temperature

6.3 Checking position of heat exchanger baffles

Prior to commissioning, check that the heat exchanger baffles are in a horizontal position:

- ▶ Open burner door by removing the two hexagon-head bolts at the sides.
- ▶ Slightly withdraw the flue gas baffles from the heat exchanger.
- ▶ Adjust the heat exchanger baffles to a horizontal position and push them back into the heat exchanger.
- ▶ Close burner door with the two hexagon bolts (approx. 90 inch-lbs (10 Nm)). Tighten the hexagon bolts evenly to properly seal the burner door.

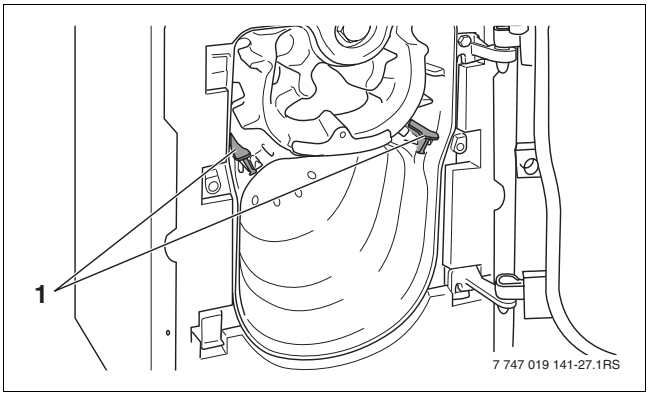

Fig. 23 Opening the burner door

1 Flue gas baffles in the heat exchanger

6.4 Preparing the heating system for operation

- ▶ Open the fuel supply at the main shut-off valve.
- ▶ Switch on the heating system emergency shut-off switch and/or the appropriate circuit-breaker.

6.5 Starting up the burner

For further start-up steps, follow the burner start-up sequence.To do so, it is essential that you consult the burner and the control documentation.

6.6 Notes on commissioning the burner

Allow burner to operate for 15 to 20 minutes before performing a combustion test. Earlier combustion tests can lead to incorrect readings as a result of burning off the sealing rope. We recommend rechecking the burner after a few weeks of operation.

Incorrect burner adjustment can cause contamination of the boiler (e.g. soot), leading to low efficiency, high emissions, and a greater risk of service calls.

- ▶ Always check combustion with the following instruments.
- ▶ Never adjust burner visually.

Required instruments:

- CO2 measuring equipment
- Draft measuring equipment
- Oil pressure gauge/Gas pressure meter
- Stack thermometer
- Smoke tester

- ▶ Check the combustion chamber pressure at the test port.
- ▶ Check the breeching draft at a test port drilled in the vent connector (chimney vent models only).

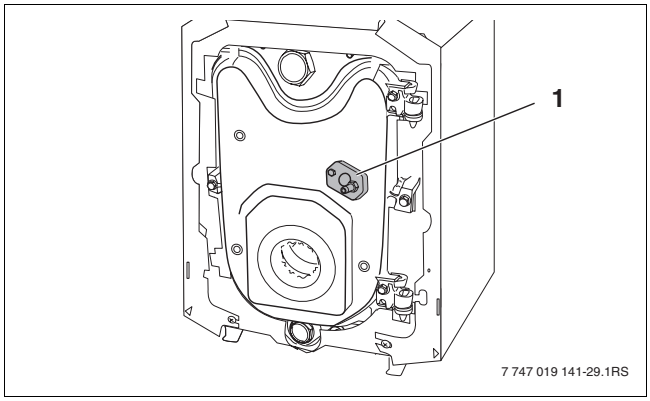

Fig. 24 Pressure test port on burner door

1 Pressure test port

6.7 Raising flue gas temperature

For the set flue gas temperature for the boiler see the technical data (→ Chapter 2.7, page 8).

You may raise the flue gas temperature if you discover during tests that the flue gas temperature is too low for the type of chimney used (risk of condensation) by one or several of the following measures:

CAUTION: Risk of explosion due to escaping gas.

- Shut off the main shut-off valve if the gas line to the gas burner must be disconnected to open the burner door. Route the remaining escaping gas outdoors.

CAUTION: Risk of burning by touching hot boiler parts.

- Wear appropriate protective gloves or use pliers.

- Adjusting the position of heat exchanger baffles

-or-

- Removing heat exchanger baffles

-or-

- Removing the heat exchanger barrier plate

6.7.1 Adjusting the position of heat exchanger baffles

Only adjust or remove heat the exchanger baffles in pairs.

- Open burner door by removing the two hexagon-head bolts at the sides.
- Adjusting the position of heat exchanger baffles.
- Slightly withdraw the flue gas baffles from the heat exchanger.
- Turn the heat exchanger baffles to a slanting position and push them back into the heat exchanger.
- Close burner door with the two hexagon bolts (approx. 90 inch-lbs (10 Nm)). Tighten the hexagon bolts evenly to properly seal the burner door.
- Re-check the flue gas temperature.

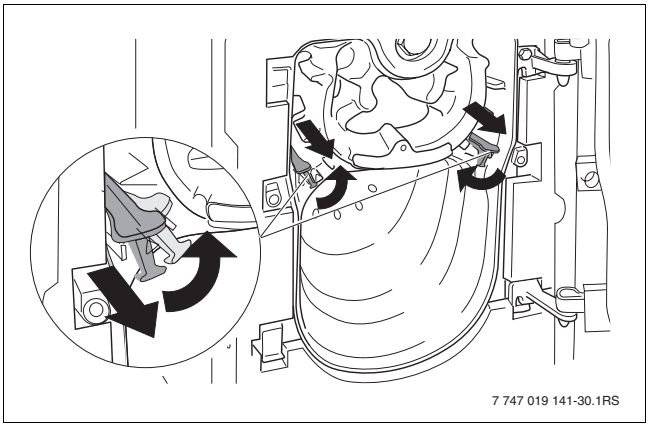

Fig. 25 Adjusting the position of heat exchanger baffles

6.7.2 Removing heat exchanger baffles

You can remove the baffle plates in pairs to raise the flue gas temperature.

- Open burner door by removing the two hexagon-head bolts at the sides.
- Remove the baffle plates towards the front.
- Close burner door with the two hexagon bolts (approx. 90 inch-lbs (10 Nm)) Tighten the hexagon bolts evenly to properly seal the burner door.
- Re-check the flue gas temperature.

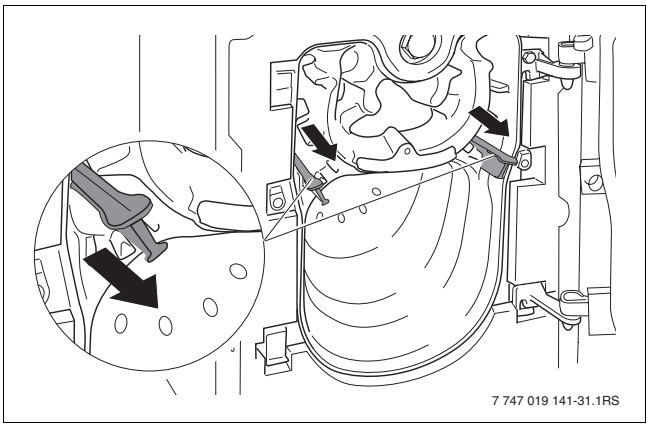

Fig. 26 Removing heat exchanger baffles

6.7.3 Removing the heat exchanger barrier plate

You can remove the blocking plate to further raise the flue gas temperature if the flue gas temperature is still too low after removing of the baffles.

- ▶ Open burner door by removing the two hexagon-head bolts at the sides.
- ▶ Remove diverter plate by loosening bolt.
- ▶ Re-check the flue gas temperature.

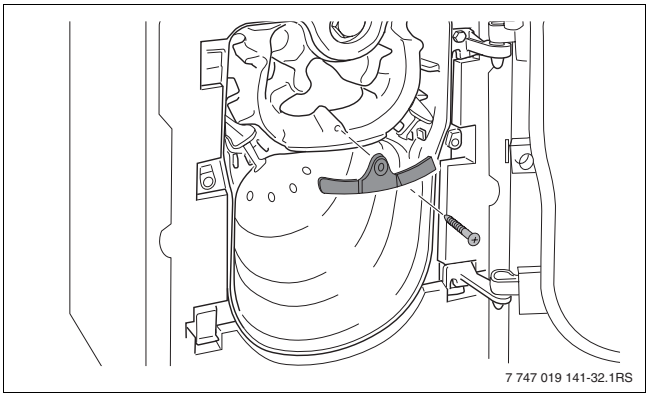

Fig. 27 Removing the heat exchanger barrier plate

6.8 Manual reset high limit (STB)

The manual reset high limit interrupts the power supply if the maximum permissible flow temperature is exceeded.

To enable a boiler reset and re-starting, the fault must be removed and the system temperature must have fallen below the limit.

- ▶ Check the function of the manual reset high limit (→ controls maintenance instructions).

6.9 Installing the burner door jacket

- ▶ Position the burner door panel on the hooks on the boiler casing.
- ▶ Secure the burner door panel with the two screws at the sides.

DANGER: Risk of fatal injury from electric shock.

- ▶ Only operate the boiler with the burner hood/door panel fitted.

- ▶ The Bosch Uni 5000F must be fitted with a burner that has an operating range that matches the specifications of the Bosch Uni 5000F.

CAUTION: Risk of system damage from use of incorrect fuel.

- ▶ Only use burners which meet the technical requirements of the Bosch Uni 5000F (→ Chapter 2.7, page 8).

- ▶ Mount the selected burner to the hole circle in the burner door.
- ▶ Connect burner cable to burner. (→ Installation instructions of burner).

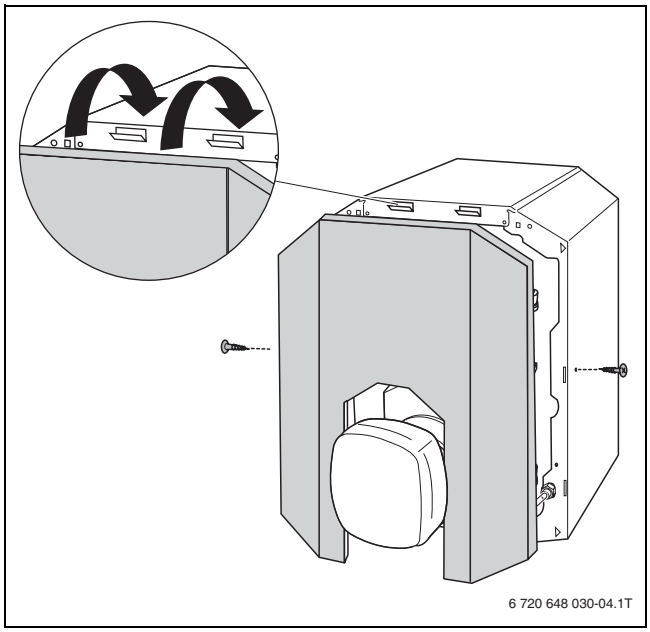

Fig. 28 Installing the burner door jacket

6.10 Commissioning log

▶ Initial and date the commissioning steps carried out.

	Commissioning operations	Page	Readings taken	Comments
1.	Fill heating system and check for leaks • Heating system pressure	22	☐ _____ psi (bar)	
2.	Bringing the system up to operating pressure ▶ bleeding heating system ▶ Testing relief valve ▶ adjust the expansion tank pressure (→ see the expansion tank manufacturer's documentation)	25	☐ _____ psi (bar)	
3.	Checking combustion air supply and flue system		☐	
4.	Checking position of heat exchanger baffles	26	☐	
5.	Switching on the controls and burner (→ controls' documentation)	26	☐	
6.	Checking flue gas temperature and raising if required	27	☐ _____ °F (°C)	
7.	Checking the manual reset high limit (STB)	28	☐	
8.	Adjusting the controls settings to suit the customer's requirements (→ controls' documentation)		☐	
9.	Informing the end user and handing over technical		☐	
	Confirmation of properly completed commissioning		Company stamp/signature/date	

Table 16

Inform the customer about the correct fuel and correct operating pressure. Enter the details in the table (→ boiler operating instructions).

7 Shutting down the heating system

CAUTION: Risk of system damage from freezing.

If the heating system has been switched off, it may freeze up in cold weather conditions.

- Leave the heating system switched on as long as possible.
- Protect a disabled heating system from freezing by draining the heating system and hot water pipes at the lowest point.

7.1 Shutting down normally

- When using ext. aquastat/control: Shut off main heating system by turning off the emergency shut-off switch (position "OFF"). This switches off the boiler with all its components.
- Further shut-down procedure → refer to aquastat/ control documentation.

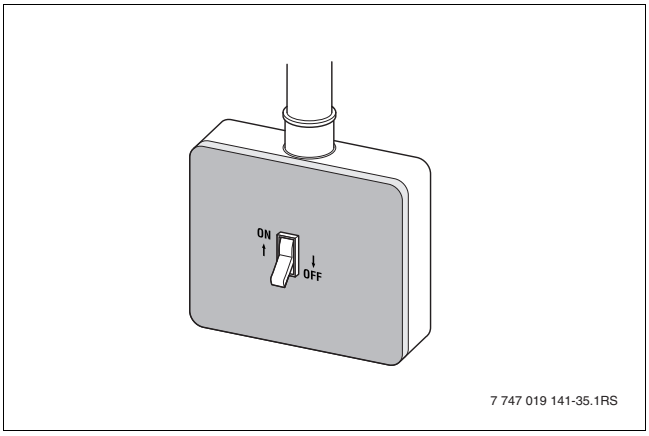

Fig. 29 Heating system emergency shut-off switch

- Shut off fuel supply by closing main valve.

7.2 Shutting down the heating system in an emergency

Use the heating system emergency shut-off switch located outside the boiler room or the heating system circuit-breaker for emergency shutdown.

What to do in an emergency

Explain to the customer what to do in an emergency, e.g. a fire.

- Never put yourself at risk of fatal injury. Your own safety must always take the highest priority.
- Shut off fuel supply by closing main valve.
- Disconnect the heating system from the electrical power supply by means of the emergency shutoff switch or the heating system circuit-breaker.

8 Heating system servicing

8.1 Why is regular maintenance important?

Heating systems should be regularly maintained for the following reasons:

- to achieve a high level of efficiency and to operate the system economically (low fuel consumption),
- to achieve a high level of operational reliability,
- to maintain the cleanest possible combustion,
- to ensure reliable operation and long service life.

Servicing work may only be carried out by a qualified service technician. If parts are replaced, only Bosch approved components may be used. A service must be carried out once a year. The results of the services must be recorded in the servicing and maintenance log.

Spare parts can be ordered from Bosch using the parts list.

8.2 Preparing the boiler for servicing

DANGER: Risk of death from electric shock.

- Before working on the boiler and prior to opening control panel:
  shut down the power supply by turning off the emergency shut-off switch or disengaging the heating system circuit breaker, and prevent from accidental reactivation.

CAUTION: Danger of Life Risk from explosion of volatile gases.

- Work on gas components must be carried out by qualified and authorized personnel only.

- Shut down the heating system. (→ Chapter 7.1, page 30)
- Remove the burner door panel or the burner hood from the boiler. (→ Chapter 3.1, page 14)
- Disconnect electrical supply to burner.

8.3 Cleaning the boiler

The boiler can be cleaned with brushes and/or by a wet method. Cleaning equipment is available as accessory.

CAUTION: Risk of burning by touching hot boiler parts.

- Wear appropriate protective personal safety equipment.

- Open burner door by removing the two hexagon bolts on the sides.

8.3.1 Cleaning the boiler with brushes

- Note the position of the heat exchanger baffles for later.
- Remove the hot gas baffle plates from the hot gas passages.
- Clean the hot gas baffle plates with one of the two cleaning brushes.

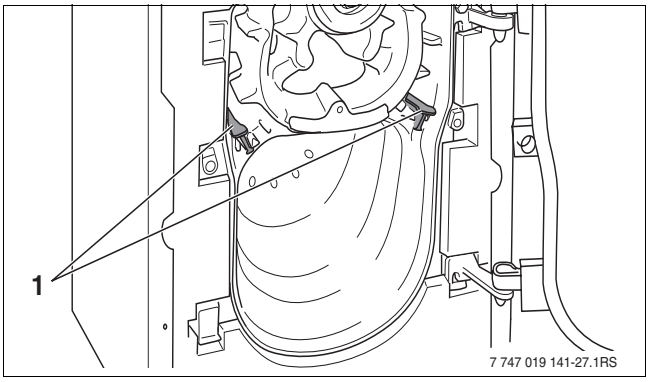

Fig. 30 After opening the burner door

1 Flue gas baffles in the heat exchanger

- Clean the hot gas passages by turning the round cleaning brush.

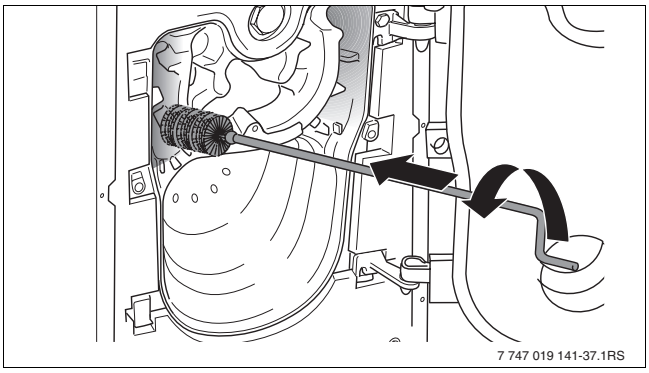

Fig. 31 Brushing out the hot gas flues

- Clean the combustion chamber with a flat brush. Remove the debris from the combustion chamber, the hot gas flues and the flue connection.
- Refit the heat exchanger baffles in their original positions.
- Check sealing rope on burner door. Replace damaged or hardened gasket cord.

You can obtain suitable gasket cord from your local Bosch sales office.

- Close burner door with the two hexagon bolts (approx. 90 inch-lbs (10 Nm)). Tighten the hexagon bolts evenly.

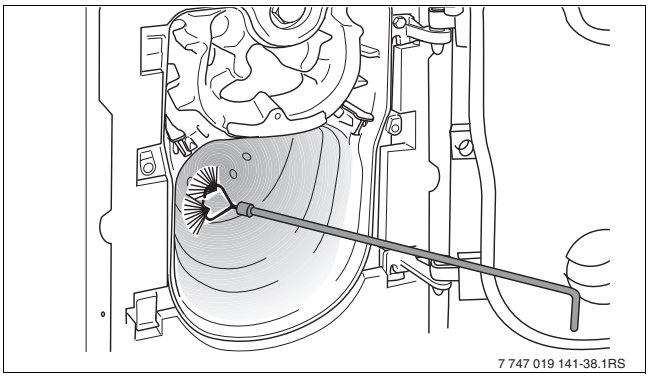

Fig. 32 Brushing out the combustion chamber

8.3.2 Wet cleaning (chemical cleaning)

For wet cleaning use a cleaning agent appropriate for the degree of soiling (soot or scale). Proceed with the wet cleaning in the same order as described for cleaning with brushes (→ Chapter 8.3.1, page 31).

Follow the instructions for the cleaning product. You may need to proceed differently from the method described here in some circumstances.

- Cover the control panel with plastic to prevent spray from entering the control panel.
- Spray cleaning agent evenly into the heat exchanger heater passages.
- Close burner door and start up the heating system.
- Heat the boiler to a temperature of at least 160 °F (70 °C).
- Shut down the heating system.
- Brush out the heat exchanger heater.

8.4 Checking heating system operating pressure

The system pressure for closed systems must be 15 – 30 psi (1.0 – 2.1 bar).

- Check system pressure.
- If the pressure gauge shows less than 15 psi (1 bar), the pressure is too low. Top up the system with water.

CAUTION: Risk of system damage due to frequent topping up.

If you have to top up the heating water frequently, the heating system may suffer damage from corrosion or scaling, depending on the water quality.

- Ensure that your heating system is bled properly.
- Check the heating system for leaks and proper operation of the expansion vessel.

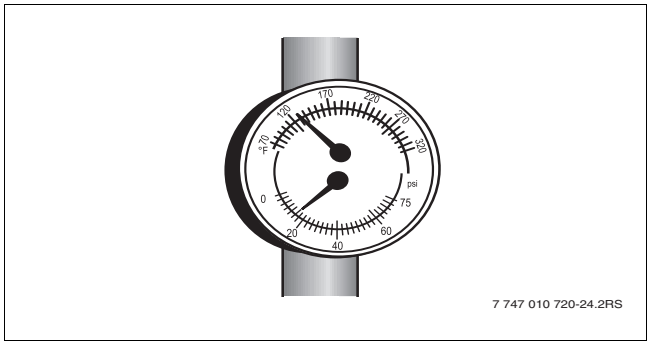

Fig. 33 Pressure/temperature gauge for showing operating pressure and feed temperature

CAUTION: Risk of damage to system due to material stresses caused by temperature differentials.

- Only fill the system when cold (the flow temperature at the temperature/ pressure gauge should be no more than 100 °F (37 °C)).

- Add water through the feed valve.
- Bleed the heating system.
- Check the operating pressure again.

8.5 Testing relief valve

The functioning of the pressure relief valve must be checked at regular intervals (1-3 years as specified by local codes).

- Make sure that no persons are in the discharge area of the pressure relief valve.
- Raise the lever on the pressure relief valve.

The pressure relief valve must open and release pressure. If the pressure relief valve does not discharge, it must be replaced, because system components may be damaged by excessive pressure.

8.6 Servicing and maintenance logs

▶ Initial and date the servicing operations completed.

The inspection and servicing logs can also be used as copy masters.

	Service work	Page	Date:_____	Date:_____	Date:_____
1.	Check general condition of heating system		☐	☐	☐
2.	Visual inspection and function check of the heating system		☐	☐	☐
3.	Checking fuel and water-carrying components of the system for: • leaks during operation • leak test • visible signs of corrosion • signs of ageing		☐	☐	☐
4.	Check the combustion chamber and the heating surface for contamination; shut down the system for this step	30	☐	☐	☐
5.	Checking the burner (→ burner documentation)		☐	☐	☐
6.	Check the combustion air supply and flue gas routing for function and safety		☐	☐	☐
7.	Check the operating pressure, relief valve and expansion tank inlet pressure	32	☐	☐	☐
8.	Checking function of DHW tank and sacrificial anode (→ DHW tank documentation)		☐	☐	☐
9.	Checking controls settings (→ controls' documentation)		☐	☐	☐
10.	Record the final checks of the inspection work, incl. measurements and test results		☐	☐	☐
	Confirmation of properly completed servicing		Company stamp/ signature	Company stamp/ signature	Company stamp/ signature

Table 17

	Date:_____	Date:_____	Date:_____	Date:_____	Date:_____	Date:_____	Date:_____
1.	☐	☐	☐	☐	☐	☐	☐
2.	☐	☐	☐	☐	☐	☐	☐
3.	☐	☐	☐	☐	☐	☐	☐
4.	☐	☐	☐	☐	☐	☐	☐
5.	☐	☐	☐	☐	☐	☐	☐
6.	☐	☐	☐	☐	☐	☐	☐
7.	☐	☐	☐	☐	☐	☐	☐
8.	☐	☐	☐	☐	☐	☐	☐
9.	☐	☐	☐	☐	☐	☐	☐
10.	☐	☐	☐	☐	☐	☐	☐
	Company stamp/ signature	Company stamp/ signature	Company stamp/ signature	Company stamp/ signature	Company stamp/ signature	Company stamp/ signature	Company stamp/ signature

Table 18

If any condition requiring maintenance work is identified in the course of servicing, that work must be carried out as necessary to ensure safe and proper operation.

	On-demand maintenance procedures	Page	Date:_____	Date:_____	Date:_____
1.	Shutting down the heating system	30	☐	☐	☐
2.	Removing and cleaning the heat exchanger baffles	31	☐	☐	☐
3.	Cleaning heat exchanger heater flue (heating surfaces) and combustion chamber and afterwards refitting heat exchanger baffles in original positions	31	☐	☐	☐
4.	Checking seals/cord gaskets on burner door and burner and replacing as necessary	31	☐	☐	☐
5.	Commissioning the heating system	26	☐	☐	☐
6.	Final check of the servicing work		☐	☐	☐
7.	Checking safe and proper operation		☐	☐	☐
	Confirmation of properly completed servicing		Company stamp/ signature	Company stamp/ signature	Company stamp/ signature

Table 19

	Date:_____	Date:_____	Date:_____	Date:_____	Date:_____	Date:_____	Date:_____
1.	☐	☐	☐	☐	☐	☐	☐
2.	☐	☐	☐	☐	☐	☐	☐
3.	☐	☐	☐	☐	☐	☐	☐
4.	☐	☐	☐	☐	☐	☐	☐
5.	☐	☐	☐	☐	☐	☐	☐
6.	☐	☐	☐	☐	☐	☐	☐
7.	☐	☐	☐	☐	☐	☐	☐
	Company stamp/ signature	Company stamp/ signature	Company stamp/ signature	Company stamp/ signature	Company stamp/ signature	Company stamp/ signature	Company stamp/ signature

Table 20

9 Troubleshooting

Two type of fault are distinguished:

- Burner faults and
- Control and heating system faults.

If there is a burner fault the fault indicator lamp on the burner comes on (→ burner documentation). Such faults can generally be reset by pressing the reset button on the burner. Controls and heating system faults are indicated on the controls display if it has one. For further information see → controls' documentation.

Correcting burner faults

CAUTION: Risk of system damage due to too many resets

Too many resets can damage the burner's ignition transformer.

- ▶ Do not press the reset button more than three times in a row.
- ▶ If the fault does not reset after the third attempt, try to localize and rectify the fault with the help of the burner documentation.
- ▶ Notify a service engineer if necessary.

▶ Press reset button on burner.

CAUTION: Risk of system damage from freezing.

The heating system can freeze up in cold weather if it has been disabled by a fault shutdown.

- ▶ Rectify the fault immediately and restart the heating system.
- ▶ If this is not possible, protect your heating system from freezing by draining the heating system and hot water pipes at the lowest point.

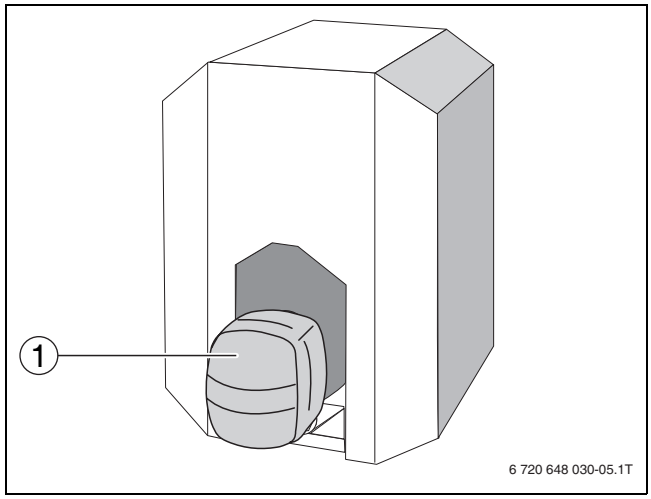

Fig. 34 Resetting the burner

1 Burner

10 Installation examples

Key to abbreviations

KR	Check valve	SH	Heating circuit adjuster
MAG	Expansion tank	SV	Pressure relief valve
PH	System pump	THV	Thermostatic radiator valve
PW	Hot water pump	WH	Water compensation pipe (diversion)

Table 21

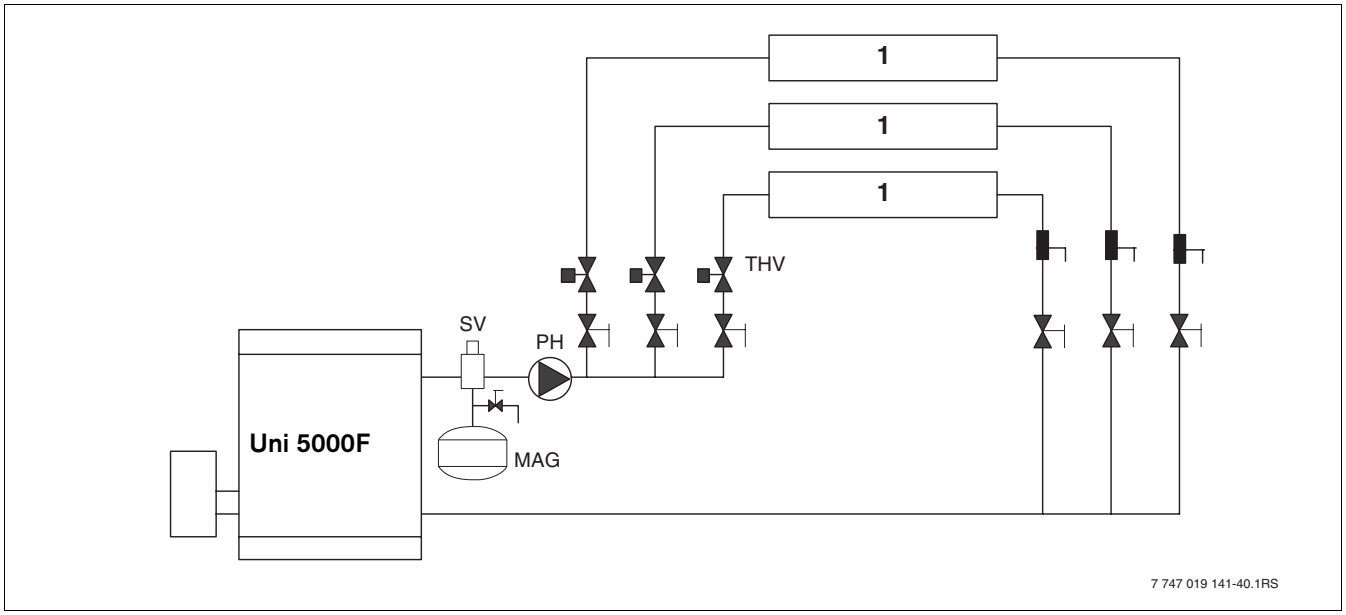

Fig. 35 Multiple circuits with circuit valves

1 Baseboard

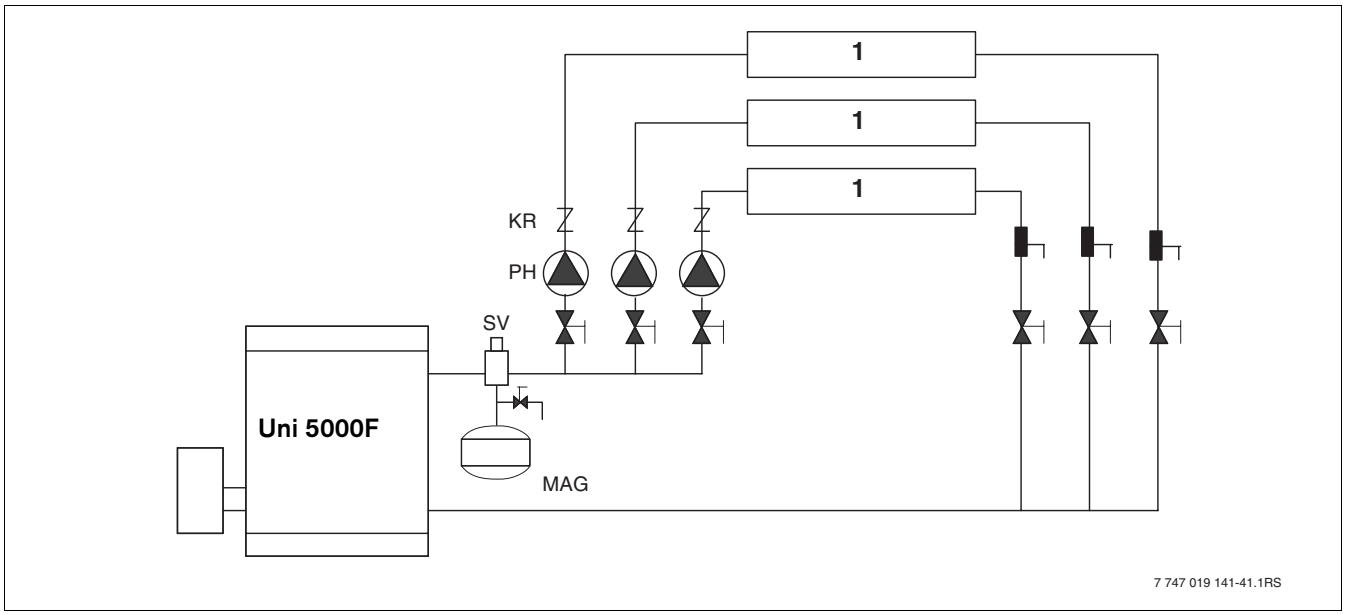

Fig. 36 Multiple circuits with circuit valves

1 Baseboard

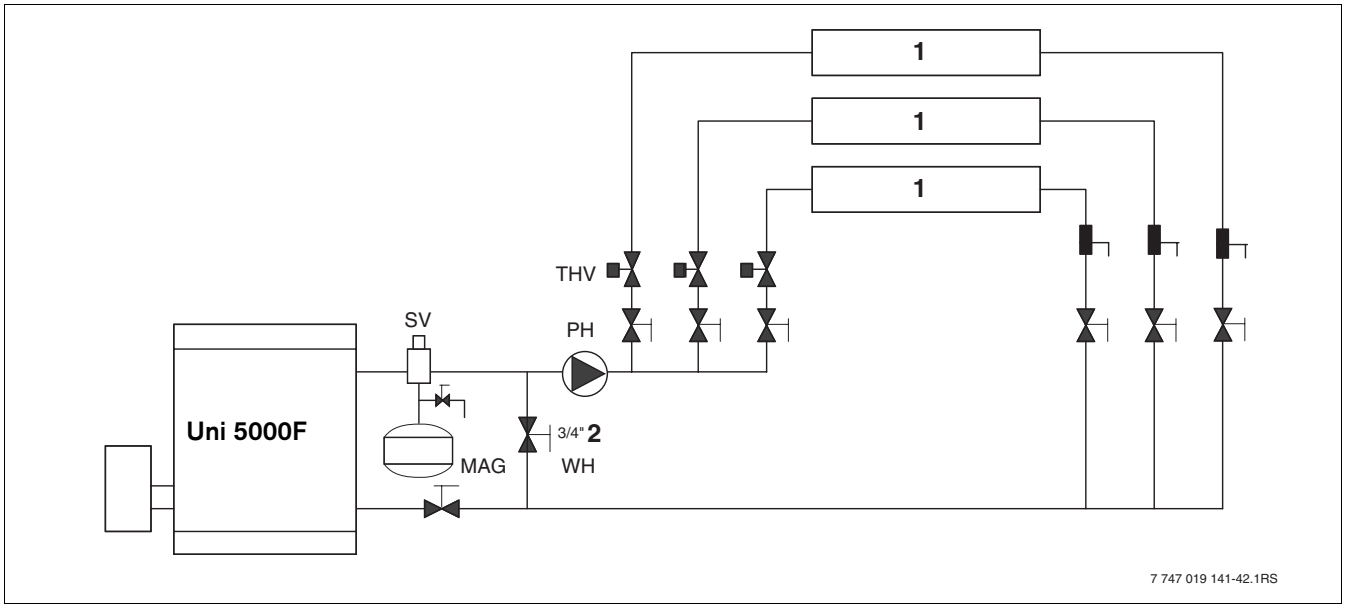

Fig. 37 Multiple circuits of water diversion for systems with a high water volume

1 Radiator
2 Boiler bypass

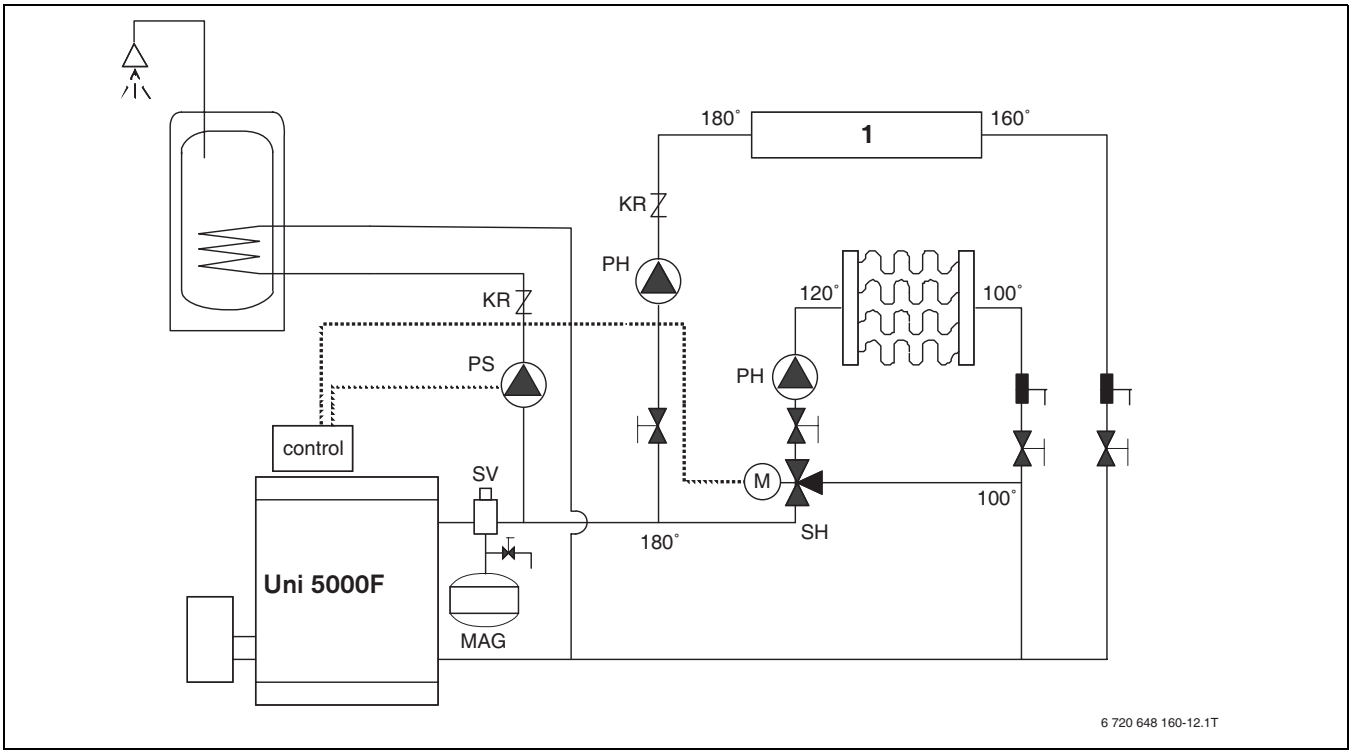

Fig. 38 Multiple circuits with pumps and motor-actuated 3-way mixing valve

1 Baseboard

11 Parts lists

The following parts are available from Bosch. If there are several Bosch article numbers for one item number, the numbers for the various models are listed in the relevant columns. Otherwise the table shows the number of components for each model.

Legend for tables 22 and 23:

x = no spare part

(x) = component of a set, only available with set

0 = no picture available

Boiler block and burner door (→ Fig. 39)

Item no.	Description	Part number		
		Uni 85	Uni 109	Uni 136
10	Boiler block Uni 5000F	63036027	63036028	63036029
Available front section components				
21	Plug G1 1/4" right	86055310		
22	Gasket D 41.7x55x1.5mm AFM 34, left	86159710		
23	Barrier plate with countersunk bolt, M8x16	63015342		
24	Countersunk bolt DIN 7991 -M 8 x 16 -Ms	(x)		
Available back section components				
50	Gasket D33x44x2mm	63005462		
51	Plug G 1	05317712		
52	Stud bolt, M10x65 5.6 as per drawing	05555070		
20	Spacer sleeve R3/8"x39	(x)		
54	Hexagon nut ISO4032-M10-8-A3K	(x)		
55	Washer DIN115-A10.5-A3K	(x)		
57	Reducer nipple G1"xG3/4"	63027607		
60	Sensor sleeve PMW -3 SEE (4 1/2")"US"	7747022367		
70	Anchor bolt set, M8x310mm	05127574	-	-
70	Anchor bolt set, M8x440mm	-	05127578	-
70	Anchor bolt set, M8x555mm	-	-	05127580
80	Flue connection complete	05354074		
Available flue connection components				
81	Sealing rope 8x1050 GP	63020961		
0	Gasket compound brown (cartridge 310 ml) for gluing sealing rope	63014361		
90	Feed-in connector assy. 1 1/4-NPT1, Uni 5000F	8718575217	8718575217	8718575218
91	Seal 55x41.7x1.5 mm	05752540		
Spare parts that are supplied with the spare boiler block				
120	Heat exchanger baffle	87185708390	87185708410	87185708420
130	Angle bracket 420mm long	7747000018	–	–
130	Angle bracket 540mm long	–	7747000019	–
130	Angle bracket 660mm long	–	–	7747000020
131	Washer DIN126-9	(x)		
132	Hexagon bolt ISO 4017 -M8x25-8.8	(x)		
133	Hexagon nut DIN 6923-M8-8.8-A3K	(x)		
140	Hinge bracket Uni 5000F	87185708450		
141	Washer DIN125-A10.5-A3K	(x)		
142	Hexagon bolt ISO4017-M10x25-8.8	(x)		
150	Hexagon bolt ISO4014-M10x65-8.8	(x)		
160	Washer DIN125-A10.5-A3K	(x)		
180	Boiler feet M10x51mm complete	05236440		
190	Flue pipe sealing collarDN130 complete	05354010		
200	Flue silencer DN130 complete, without condensate drain; higher sound absorption	05074020		

Table 22 Boiler block and burner door

Item no.	Description	Part number		
		Uni 85	Uni 109	Uni 136
or:				
210	Flue silencer D130 with an adaptor of 100mm length, with condensate drain; lower sound absorption	05074022		
Flue silencer components				
190	Flue pipe sealing collarDN130 complete	05354010		
220	Flue pipe sealing collar assy. DN130 (stepped)	05354030		
230	Sealing rope 10x2000 GP	63020963		
250	Burner door complete	7747022854		
Available burner door components				
260	Hinge Uni 5000F	05327020		
270	Washer DIN125 A10,5 A3K	(x)		
280	Hexagon bolt ISO4017 M10x25 8.	(x)		
290	Inspection window seal assy. V3	63023634		
Obtainable individual parts of inspection window seal				
300	Gasket 30x30x3	63014382		
310	Inspection window glass, Tempax 30x30x3.3mm	7747021876		
320	Inspection window cover	x		
330	Hexagon bolt ISO4017 M6x12 8.8 A3K	(x)		
340	Pressure testing nozzle M6 SW10 V2	(x)		
350	Heat insulation for burner door	63002401		
Available heat insulation components				
360	Heat insulation for burner door panel 24mm thick	63004169		
370	Insulation ring for burner door panel 10mm thick	63004170		
380	Washer DIN9021 A6,4 A3K	(x)		
390	Sheet metal screw DIN7981 C ST6,3x25 A3T	(x)		
400	Sealing rope 14x1650 GP	63020965		
0	Gasket compound brown (cartridge 310 ml) for gluing sealing rope	63014361		
(x)	**Mounting material for boiler block Uni 5000F** Contents: 1 countersunk bolt M8x16 Ms 2 spacer sleeves R3/8"x39 2 hexagon nuts ISO4032 M10 8 A3K 8 washers DIN125 A10.5 A3K 4 washers DIN126 9 4 hexagon bolts ISO4017 M8x25 8.8 4 hexagon nuts DIN6923 M8 8.8 A3K 4 hexagon bolts ISO4017 M10x25 8.8 2 hexagon bolts DIN6921 M10x65 8.8 1 hexagon bolt ISO4017 M6x12 8.8A3K 2 washers DIN9021 A6.4 A3K 2 sheet metal screws DIN7981 C ST6,3x25 A3T	63031288		
0	**B-KIT Uni 5000F** **Contents:** 1 Supply manifold Uni 5000F 1 elbow 90DEG11/4 1 elbow 90DEG 3/4 I/A 1 double nipple R11/4-11/4NPTx75 1 boiler drain 3/4 1 relief valve 3/4Mx3/4F 30PSI 1 temperature/pressure gauge 1 / 4 NPT 1 Bolt set B-Kit Uni 5000F 1 adjustable boiler foot M10x51 packed	63029762		

Table 22 Boiler block and burner door

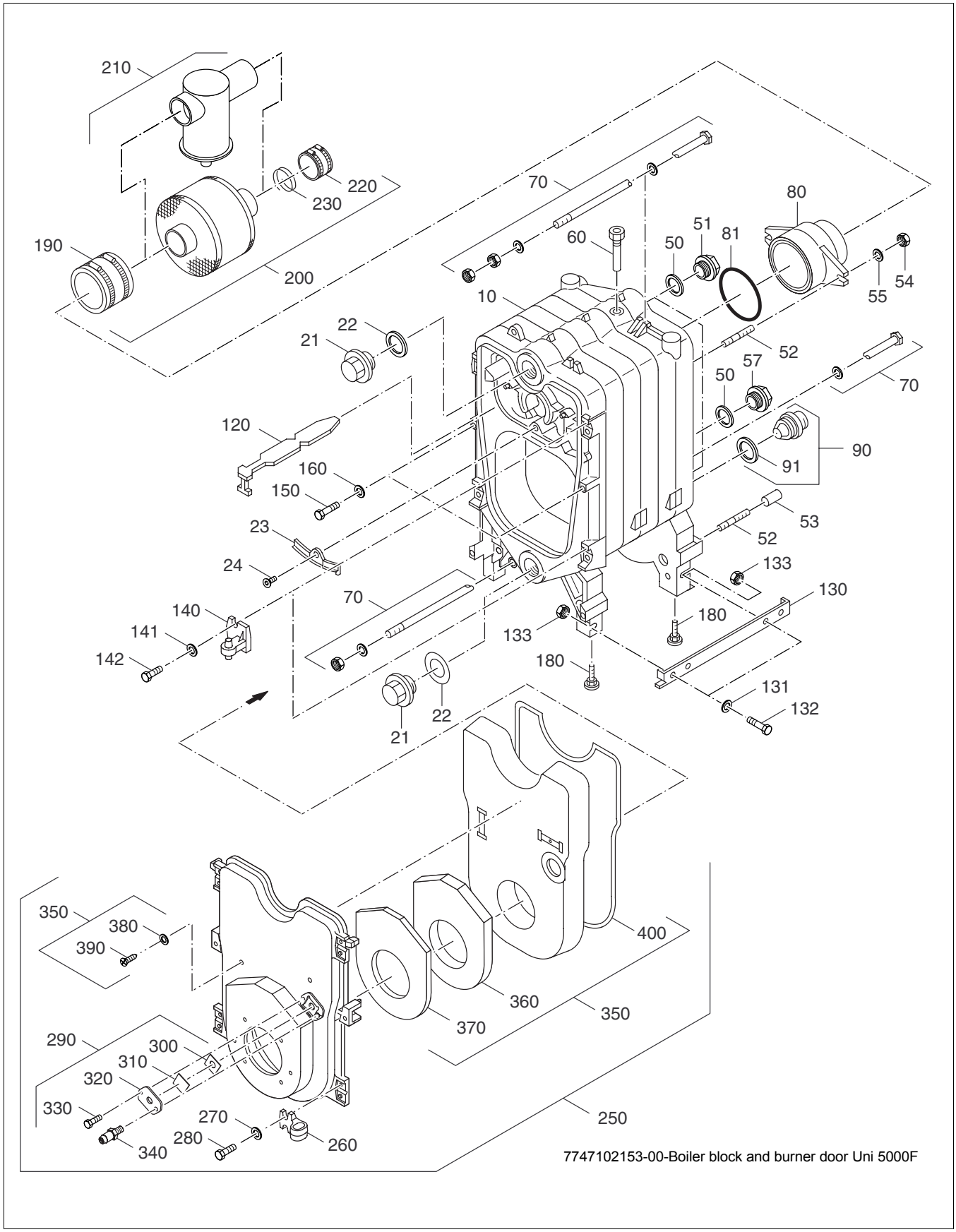

Fig. 39 Boiler block and burner door

Boiler jacket (→ Fig. 40)

Item no.	Description	Part number		
		Uni 85	Uni 109	Uni 136
A complete outer panel set consists of: front panel, rating plate, front insulation, cross-member, 2 side panels, boiler insulation, retaining spring, front hood, rear hood, rear panel and fixings.				
Available outer panel components				
10	Front panel assembly Uni 5000F	8718582387		
18	Badge Bosch	8718582440		
20	Front insulation Uni 5000F	63025265		
40	hexagon bolt ISO4017-M8x12-8.8	(x)		
50	Cross-member Uni 5000F	63029209		
60	Hexagon nut DIN555 M8 5	(x)		
70	Washer DIN126 9	(x)		
80	Side panel 445mm long	8718582388	-	-
80	Side panel 565mm long	-	8718582389	-
80	Side panel 685mm long	-	-	68718582390
85	Sheet metal screw C ST3,9x13 A3T	(x)		
90	Flathead bolt 3,9x9,5 A3T	(x)		
95	Plug-in fuse	(x)		
100	Boiler block insulation Uni 5000F	7747014842	-	-
100	Boiler block insulation Uni 5000F	-	7747014843	-
100	Boiler block insulation Uni 5000F	-	-	7747014844
110	Retaining spring for securing heat insulation	7747016084		
120	Front hood Uni 5000F	8718582386		
125	Cover panel 300x160 cover front	8718582391		
130	Rear hood assembly Uni 5000F	8718582383	8718582384	8718582385
140	Rear panel Uni 5000F	63036024		
145	Rear panel insulation	63025264		
150	Cable clamp	07060754		
160	Washer DIN432 10,5 St A3E	(x)		
170	Hexagon nut DIN555 M10 5	(x)		
(x)	**Panel fixings** Uni 5000F	05180842		
	Contents:			
	17 flathead bolts ea. 3.9x9.5-A3T			
	3 sheet metal screws C-St3,9x13-A3T			
	Oval-headed screw DIN7985-M6x16-4.8-A3T			
	2 push-fit catches			
	4 hexagon bolts ISO4017-M8x12-8.8			
	1 hexagon nut DIN555 M8 5			
	4 washers DIN126 9			
	4 washers DIN432 10.5 St A3E			
	4 hexagon nuts DIN555 M10 5			

Table 23 boiler jacket

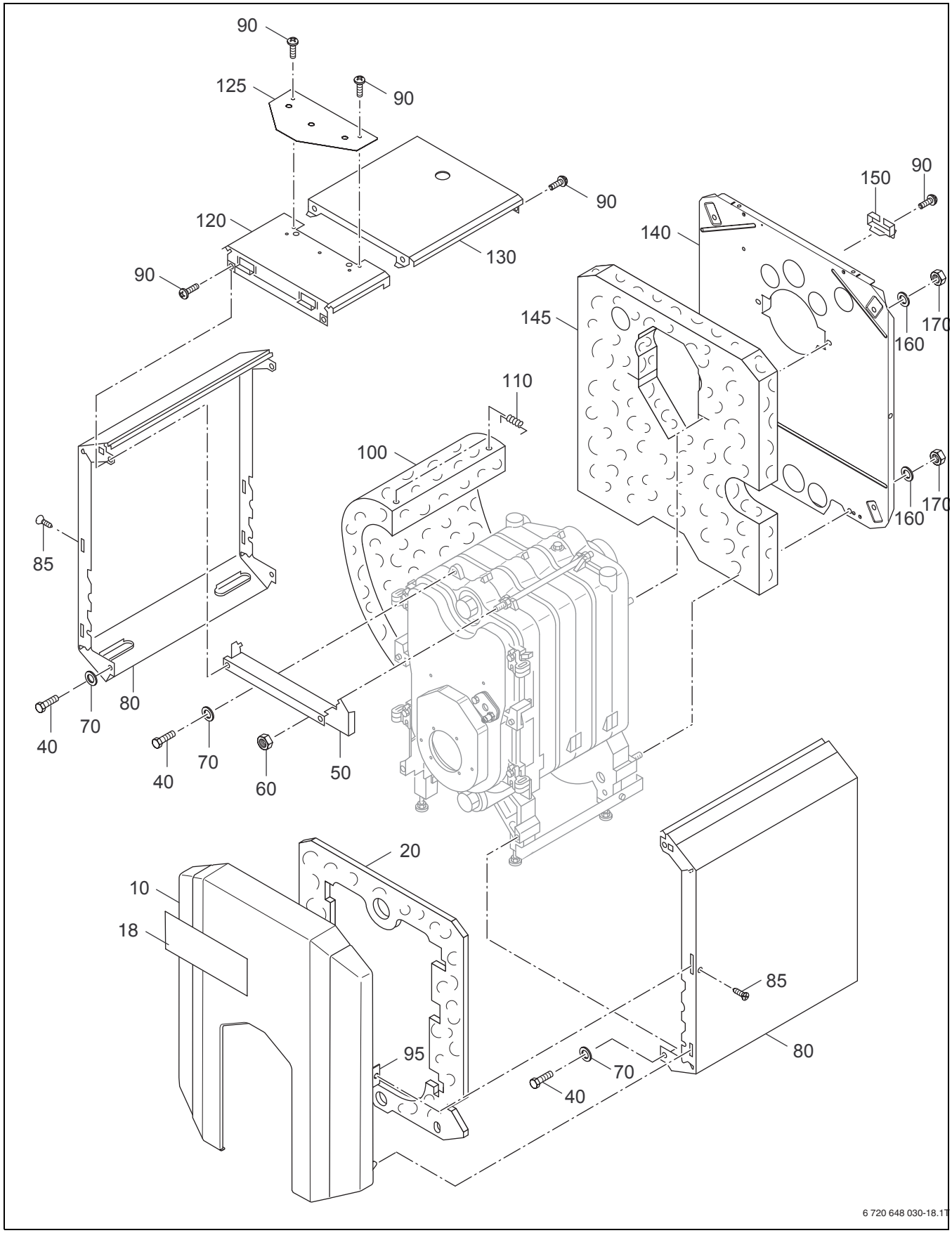

Fig. 40 boiler jacket Uni 5000F

12 Circuit diagrams

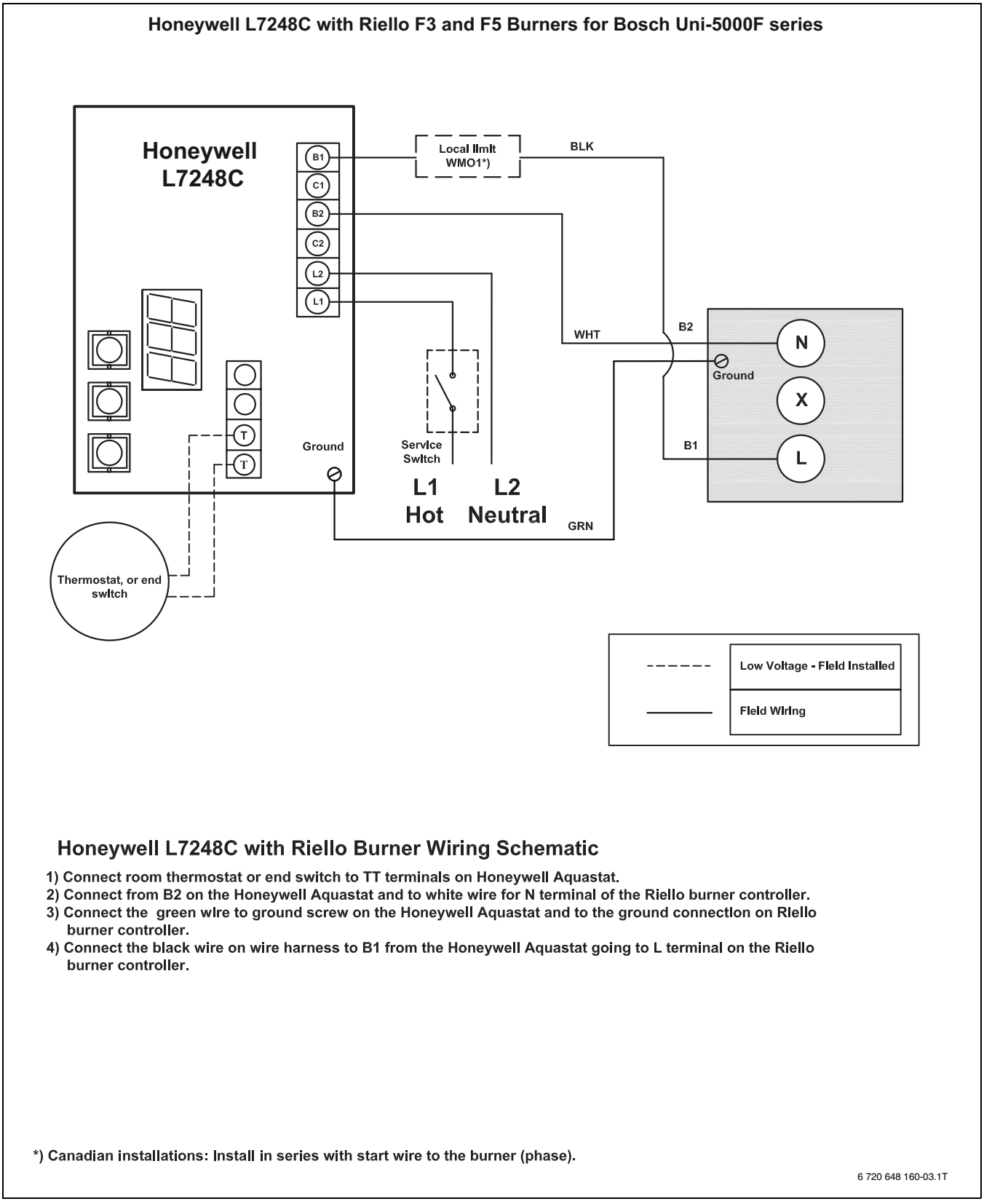

Fig. 41 Circuit diagram 1

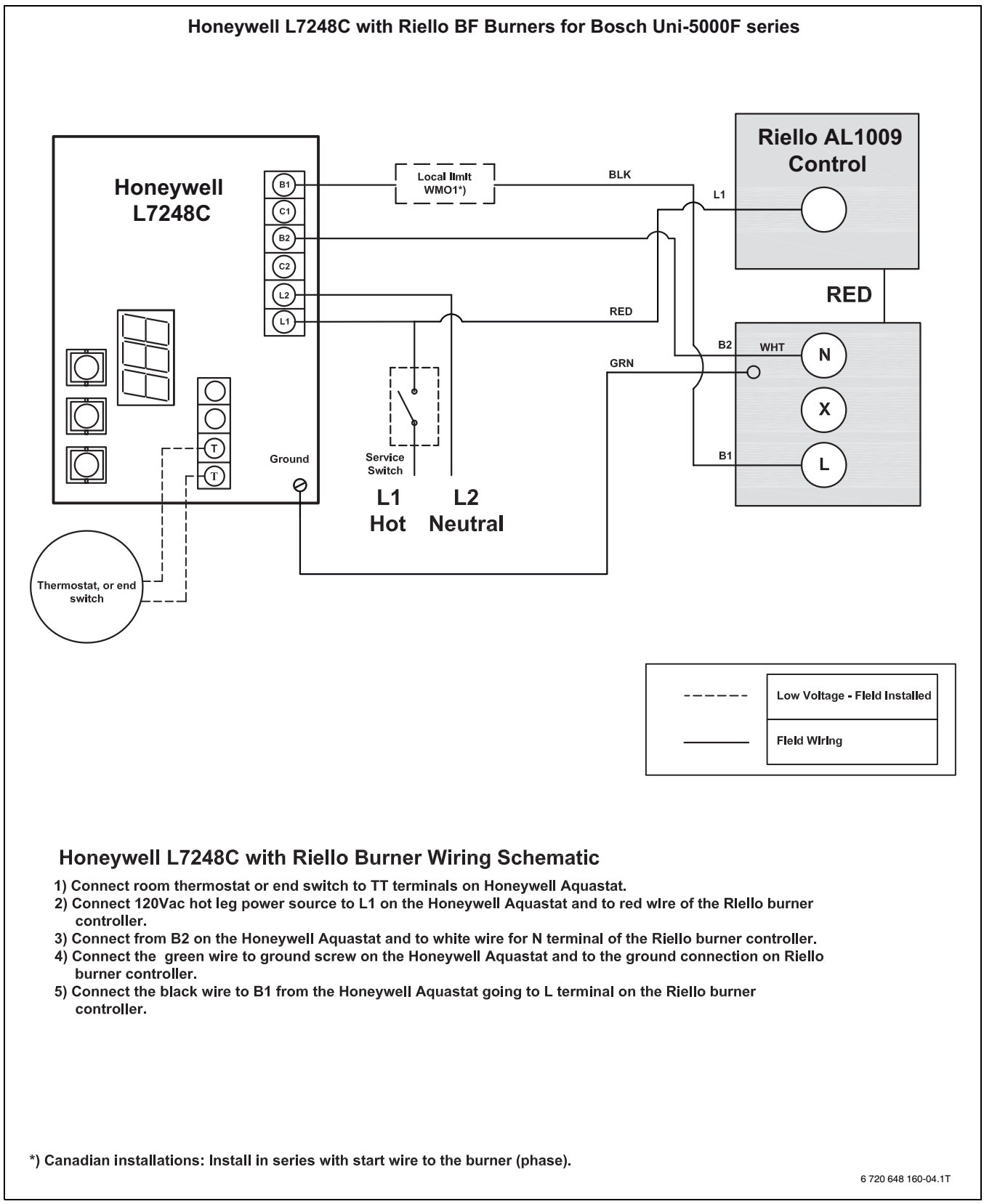

Honeywell L7248C with Riello Burner Wiring Schematic

1) Connect room thermostat or end switch to TT terminals on Honeywell Aquastat.
2) Connect 120Vac hot leg power source to L1 on the Honeywell Aquastat and to red wire of the Riello burner controller.
3) Connect from B2 on the Honeywell Aquastat and to white wire for N terminal of the Riello burner controller.
4) Connect the green wire to ground screw on the Honeywell Aquastat and to the ground connection on Riello burner controller.
5) Connect the black wire to B1 from the Honeywell Aquastat going to L terminal on the Riello burner controller.

*) Canadian installations: Install in series with start wire to the burner (phase).

6 720 648 160-04.1T

Fig. 42 Circuit diagram 2

Honeywell L7248C with Carlin EZ-1 HP P10 Burner for Bosch Uni-5000F series

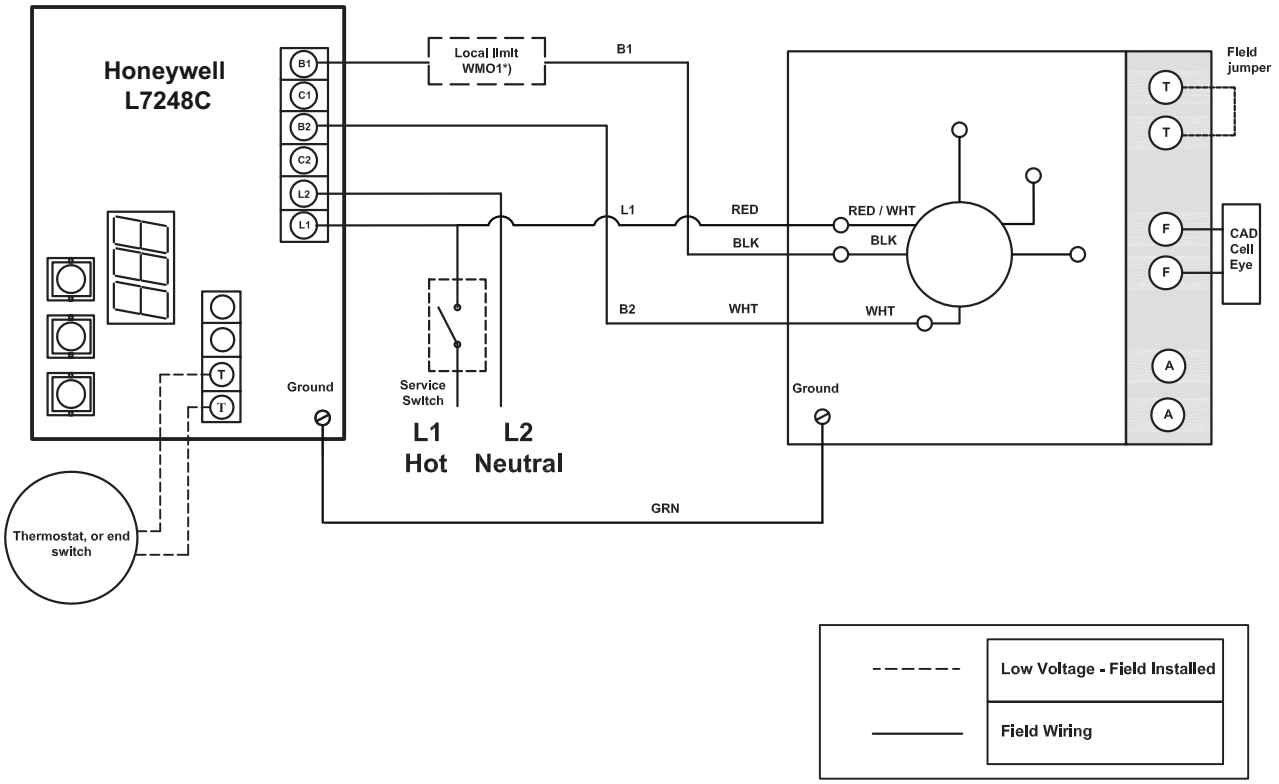

Honeywell L7248C with Carlin Burner Wiring Schematic

1) Connect room thermostat or end switch to TT terminals on Honeywell Aquastat.
2) Connect 120Vac hot leg power source to L1 on the Honeywell Aquastat and to red wire of the Carlin burner controller.
3) Connect from B2 on the Honeywell Aquastat and to white wire on the Carlin burner controller.
4) Connect the green wire to ground screw on the Honeywell Aquastat and to the ground connection on Carlin burner controller.
5) Connect the black wire to B1 from the Honeywell Aquastat going to black wire on the Carlin burner controller.
6) Install a jumper wire on the TT terminals on the Carlin burner controller

*) Canadian installations: Install in series with start wire to the burner (phase).

6 720 648 160-05.1T

Fig. 43 Circuit diagram 3

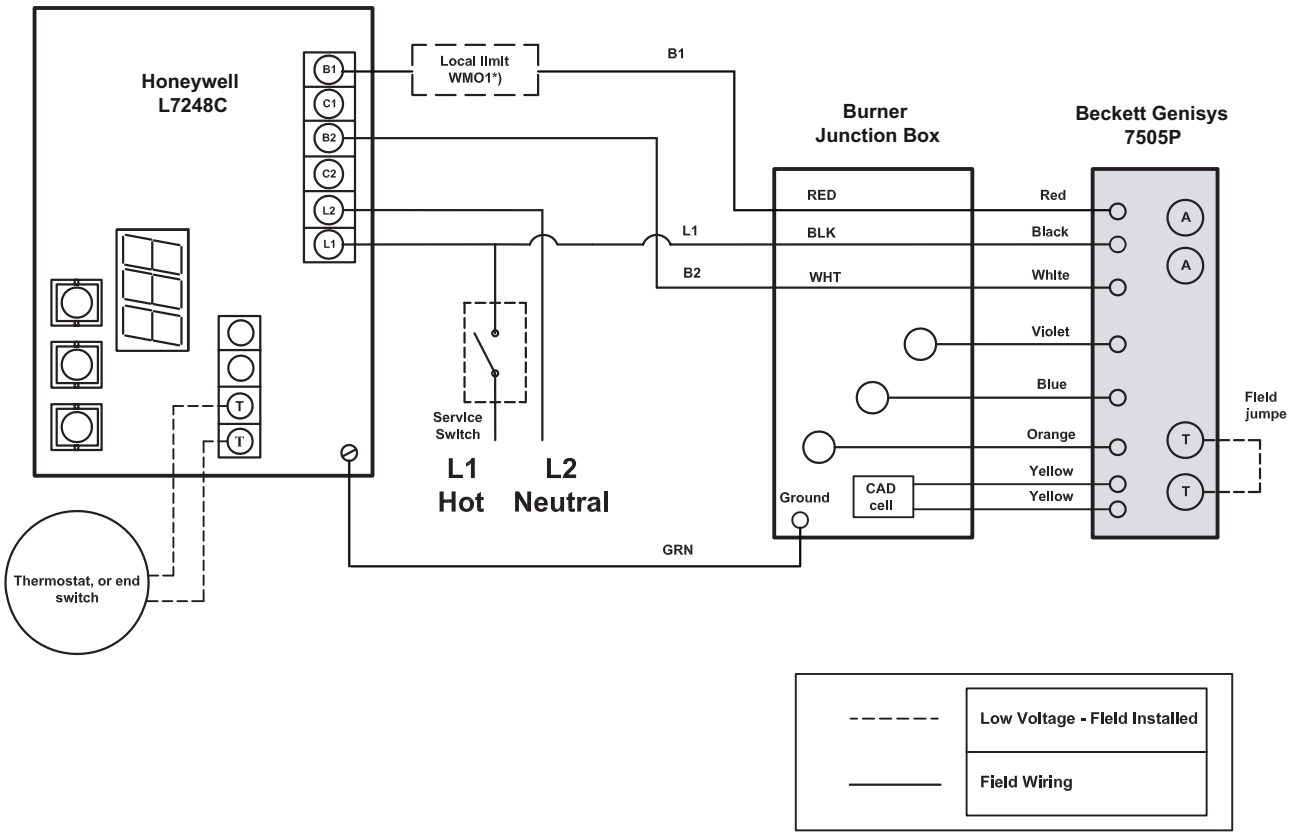

Honeywell L7248C with Beckett NX Burner Wiring Schematic

1) Connect room thermostat or end switch to TT terminals on Honeywell Aquastat.
2) Connect 120Vac hot leg power source to L1 on the Honeywell Aquastat and to black wire of the Beckett Genisys burner controller.
3) Connect from B2 on the Honeywell Aquastat and to white wire on the Beckett Genisys burner controller.
4) Connect the green wire to ground screw on the Honeywell Aquastat and to the ground connection on the Junction Box of Beckett Genisys burner controller.
5) Connect the red wire from B1 on the Honeywell Aquastat to red wire on the Beckett Genisys burner controller.
6) Install a jumper wire on the TT terminals on the Beckett Genisys burner controller

*) Canadian installations: Install in series with start wire to the burner (phase).

6 720 648 160-06.1T

Fig. 44 Circuit diagram 4

AquaSmart with Riello F3 and F5 Burners for Bosch Uni-5000F series

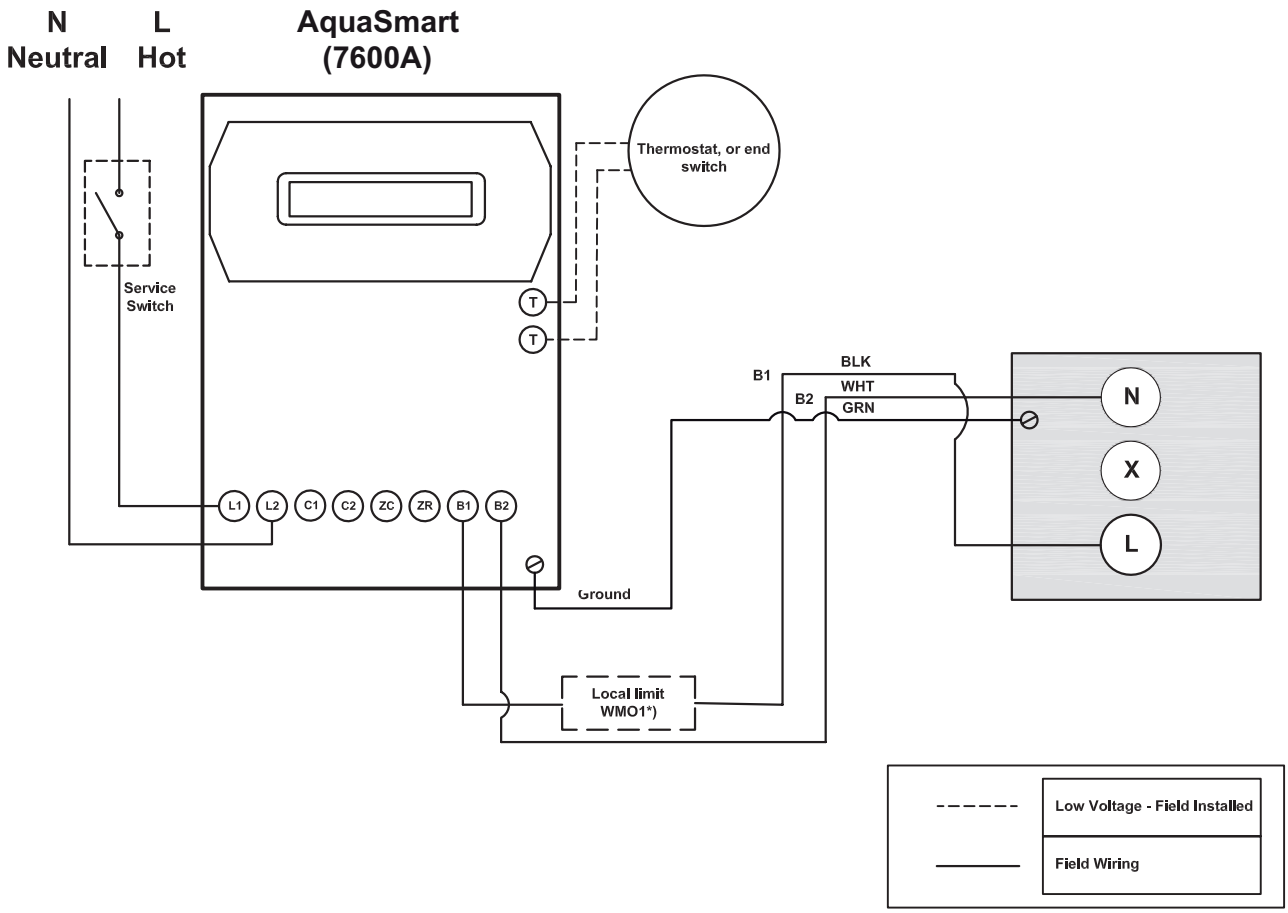

AquaSmart with Riello Burner Wiring Schematic

1) Connect room thermostat or end switch to TT terminals on Beckett AquaSmart.
2) Connect from B2 on the Beckett AquaSmart to white wire on N terminal of the Riello burner controller.
3) Connect the green wire to ground screw on the Beckett AquaSmart and to the ground connection on Riello burner controller.
4) Connect the black wire to B1 from the Beckett AquaSmart going to L terminal on the Riello burner controller.

*) Canadian installations: Install in series with start wire to the burner (phase).

6 720 648 160-07.1T

Fig. 45 Circuit diagram 5

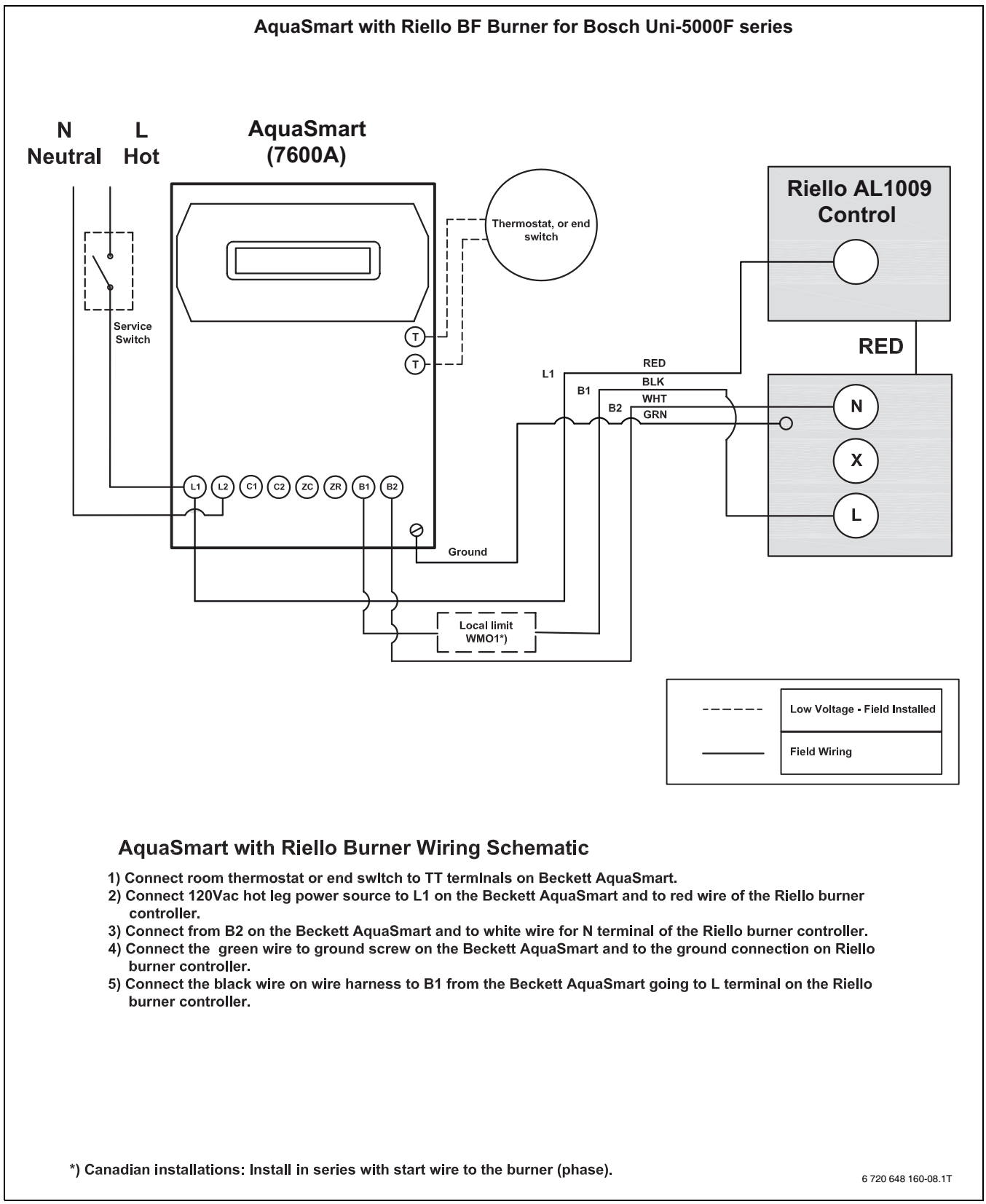

Fig. 46 Circuit diagram 6

AquaSmart with Carlin EZ-1 HP P10 Burner for Bosch Uni-5000F series

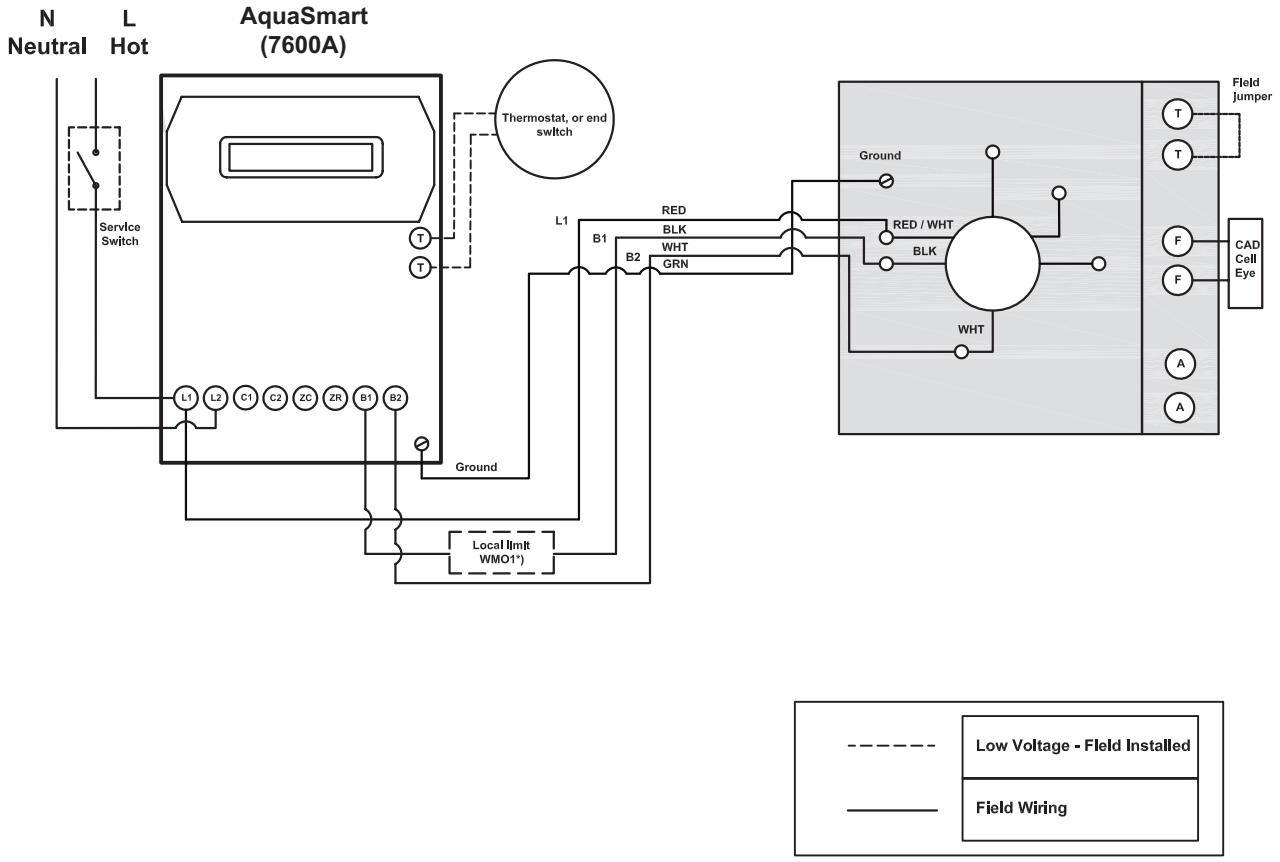

AquaSmart with Carlin Burner Wiring Schematic

1) Connect room thermostat or end switch to TT terminals on Beckett AquaSmart.
2) Connect 120Vac hot leg power source to L1 on the Beckett AquaSmart and to red/white wire on the Carlin burner controller.
3) Connect from B2 on the Beckett AquaSmart and to white wire on the Carlin burner controller.
4) Connect the green wire to ground screw on the Beckett AquaSmart and to the ground connection on Carlin burner controller.
5) Connect the black wire to B1 from the Beckett AquaSmart going to black wire on the Carlin burner controller.
6) Install a jumper wire on the TT terminals on the Carlin burner controller

*) Canadian installations: Install in series with start wire to the burner (phase).

6 720 648 160-09.1T

Fig. 47 Circuit diagram 7

AquaSmart with Beckett NX Burner Burner for Bosch Uni-5000F (-85, -109, -136) series

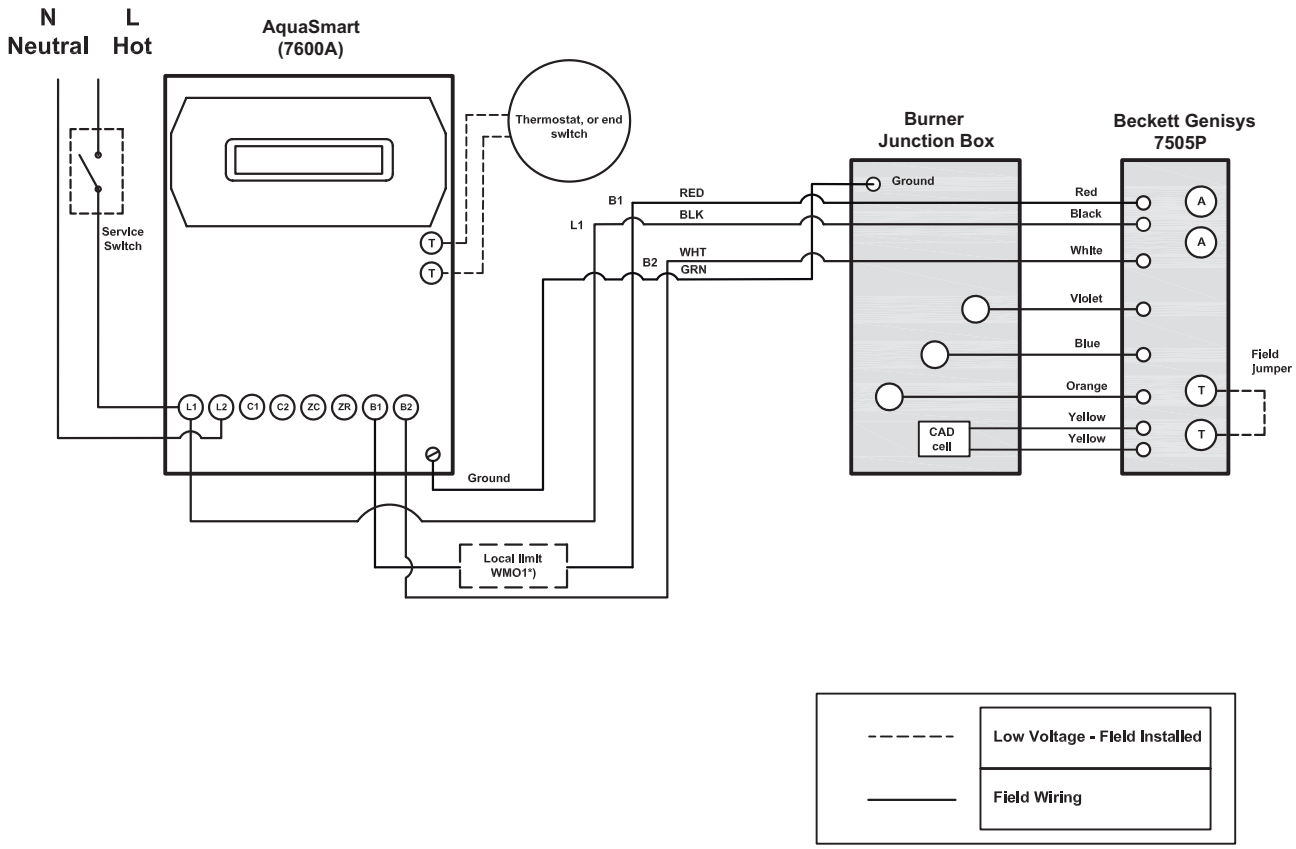

AquaSmart with Beckett NX Burner Wiring Schematic

1) Connect room thermostat or end switch to TT terminals on Beckett AquaSmart.
2) Connect 120Vac hot leg power source to L1 on the Beckett AquaSmart and to black wire of the Beckett Genisys burner controller.
3) Connect from B2 on the Beckett AquaSmart and to white wire on the Beckett Genisys burner controller.
4) Connect the green wire to ground screw on the Beckett AquaSmart and to the ground connection on the Junction Box of Beckett Genisys burner controller.
5) Connect the red wire to B1 from the Beckett AquaSmart going to red wire on the Beckett Genisys burner controller.
6) Install a jumper wire on the TT terminals on the Beckett Genisys burner controller.

*) Canadian installations: Install in series with start wire to the burner (phase).

6 720 648 160-10.1T

Fig. 48 Circuit diagram 8

Index

A
Aquastat 23

B
B-kit components 7
Boiler output 8
Boiler room 10
Boiler type 8
Burner, notes on commissioning 26

C
Changing boiler hinges to left hand side 17
Checking for leaks (CH system) 22
Cleaning heat exchanger 31
Combustion air supply 11
Commissioning 25
  log 29
Connecting the fuel supply 23
Connections 8
Correcting burner faults 37

D
Dimensions 8
Dirt trap 20

E
Environment 10

F
Fitting B-kit 20
Fitting burner door panel 24
Fitting outer casing panels 24
Flow temperature 8
Fuel 11

H
Heat exchanger baffles, checking position 26
Heating circuits, multiple 38
Heating emergency stop switch 30

I
Installation examples 38

L
Log, commissioning 29
Logs, servicing and maintenance 34

M
Main isolating cock 26
Main isolating valve 26
Maintenance, regular 31
Master switch 30
Mounting the adjustable feet 18
Mounting the burner 23

O
On/Off switch 30
Onsite testing pressure 22
Operating Conditions 11
Operating conditions 9

P
Pack contents 7
Parts lists 40
Permissible operating pressure 8
Power supply voltagePower supply 12
Pressure testing nozzle 26
Pressure/temperature gauge 25, 32

R
Raising flue gas temperature 27
Rated heat output 8
Removing burner door panel 14
Removing burner hood 24
Removing heat exchanger baffles 31
Replacing rope gasket 31
Reversing boiler door 17

S
Safety 4
Safety valve 20, 22, 25
Shutting down 30
Site test pressure 12
Specifications 8

T
Temperature/pressure gauge 25, 32
Topping up 32
Transporting with boiler trolley/sack truck 15
Troubleshooting 37

W
Wall clearances 16
Water quality 12
Wet cleaning 32

Notes

Notes

United States and Canada

Bosch Thermotechnology Corp.
50 Wentworth Avenue
Londonderry, NH 03053
Tel. 603-552-1100
Fax 603-584-1681
www.bosch-climate.us
U.S.A.

Products manufactured by
Bosch Thermotechnik GmbH
Junkersstrasse 20-24
D-73249 Wernau
www.bosch-thermotechnology.com

Bosch Thermotechnology Corp. reserves the right to make changes without notice due to continuing engineering and technological advances.