

Caution!

Observe the safety instructions of this installation and maintenance manual before placing the boiler in operation.

Danger!

If installation, adjustment, modification, operation or maintenance of the heating system is carried out by an unqualified person, this may result in danger to life and limb or property damage.
The directions of this installation and maintenance manual must be followed precisely.
Contact a qualified service company or service provider if support or additional information is required.

Caution!

The operating manual is a component of the technical documentation and must be handed over to the operator of the heating system.
Discuss the content of this manual with the owner or operator of the heating system to ensure that they are familiar with all information required for operation of the heating system. If the boiler will be installed in Massuchussetts, it must be installed by an installer or dealer who is registered there.

Low-temperature oil and gas-fired boiler

Bosch Uni 5000F US/CA 171/207/256

BOSCH

Installation and Service Instructions

6 720 648 162- 2011/08 US/CA

Contents

1 Safety Considerations and Symbol Descriptions 4
1.1 Regarding this Manual 4
1.2 Explanation of symbols 4
1.3 Observe the following Symbols 4
1.3.1 Installation Guidelines 5
1.3.2 Boiler Room Guidelines 5
1.4 Tools, Materials and Accessories 5
1.5 Disposal 6

2 Product description 7
2.1 Intended use 7
2.2 Certification and testing mark 7
2.3 Notes on installation and operation 7
2.4 Heating system water quality 7
2.5 Product description 7
2.6 Pack contents 8
2.7 Dimensions Specifications 9
2.7.1 Bosch Uni 5000F dimensions 9
2.8 Conditions for operation 10
2.8.1 General operating conditions 11
2.8.2 Conditions for the boiler room and the environment 11
2.8.3 Combustion air supply conditions 12
2.8.4 Conditions, Fuel 12
2.8.5 burner selection 13
2.8.6 Conditions power supply 13
2.8.7 Conditions for hydraulic system and water quality 14

3 Moving the boiler 15

4 Installing the boiler 16
4.1 Wall clearances 16

5 Boiler block assembly 17
5.1 Assembly when delivered in sections 17
5.1.1 Preparing boiler sections 17
5.1.2 Preparing push nippples and nipple ports 18
5.1.3 Preparing the intermediate section 18
5.1.4 Inserting the section sealing 19
5.1.5 Knock intermediate section into place 19
5.1.6 Boiler section alignment 19
5.1.7 Join boiler sections by the nipples at the top and bottom boiler hub 20
5.1.8 Fitting the anchor rods 21
5.1.9 Fitting distribution tube and supply/return header 22
5.1.10 Sealing the sensor well 23
5.1.11 Positioning the flue outlet 23
5.1.12 Sealing boiler hubs 23
5.2 Check for leaks 24
5.2.1 Preparing for a leak test). 24
5.2.2 Leak test 24
5.3 Installation when the boiler is supplied assembled 24
5.4 Installation steps for disassembled and assembled delivery 25
5.4.1 Fitting adjustable feet 25
5.4.2 Insert the flue gas baffle plates 25
5.4.3 Installing the burner door 26
5.4.4 Fitting the boiler jacket 26
5.5 Positioning and leveling the boiler 29

6 Installing the boiler 30
6.1 Flue pipe installation 30
6.1.1 Chimney venting 30
6.2 Fitting the water connections 31
6.2.1 Fitting the B-kit 31
6.2.2 Installation of boiler drain (included in B-Kit) 31
6.2.3 Installing system components 32
6.3 Filling the heating system and checking for leaks 32
6.4 Mounting the burner 33
6.5 Connecting the fuel supply 34
6.6 Installing aquastat 34
6.7 Blocked vent switch (required in Canada) 34
6.8 Electrical connections 34
6.9 Jacket panel installation 35

7 Commissioning the heating system 36
7.1 Bringing the system up to operating pressure 36
7.2 Checking the safety valve 36
7.3 Preparing the heating system for operation 36
7.4 Starting up the burner 36
7.5 Notes on commissioning the burner 36
7.6 Raising flue gas temperature 37
7.6.1 Removing flue gas baffle plates 37
7.6.2 Removing the blocking plate 38
7.7 Manual reset high limit (STB) 38
7.8 Installing jacket panels 38
7.9 Commissioning log 39

8 Shutting down the heating system 40
8.1 Shutting down normally 40
8.2 Shutting down the heating system in an emergency 40

9	**Heating system servicing**	**41**
9.1	Why is regular maintenance important?	41
9.2	Preparing the boiler for servicing	41
9.3	Cleaning the boiler	41
9.3.1	Cleaning the boiler with brushes	41
9.3.2	Wet cleaning (chemical cleaning)	42
9.4	Checking heating system operating pressure	42
9.5	Testing relief valve	43
9.6	Servicing and maintenance logs	44
10	**Troubleshooting**	**47**
11	**Installation examples**	**48**
12	**Parts lists**	**51**
13	**Circuit diagrams**	**57**
Index		**66**

1 Safety Considerations and Symbol Descriptions

1.1 Regarding this Manual

This document contains important information regarding safe and proper installation, operation and maintenance of the boiler.

The high tech Uni 5000F boiler is designated as a hot water heating boiler.

The Installation and Maintenance Instructions are directed to the installing contractor who has professional knowledge regarding boiler installation and maintenance.

1.2 Explanation of symbols



Warnings are indicated by a warning triangle and a grey background.

Signal words are used to indicate the seriousness of the ensuing risk if measures for minimising damage are not taken.

- Caution indicates that minor damage to property may occur.
- Warning indicates that minor personal injury or severe damage to property may occur.
- Danger means that severe personal injury may occur. Very serious cases may result in death.



Notes are identified in the text by this symbol. They are bounded by horizontal lines above and below the text.

Notes contain important additional information.

Notes do not contain any warnings or information about hazards or risks.

1.3 Observe the following Symbols

All applicable local, state, and national codes and regulations must be observed for the installation of the boiler:

- The local building code requirements regarding placement, combustion air and venting and chimney system must be followed.
- Follow applicable electrical code requirements.
- Follow the local code and standards regarding safe boiler operation.
- The technical rules of the gas suppply company regarding the connection of a gas burner to the gas system.



NOTICE
Use only original spare parts. Bosch can not be held liable for damage caused by non-Bosch parts.



NOTICE
Oil boilers: The boiler installation must be performed by a qualified installer in accordance with regulations put forth in NFPA-31 Installation of Oil-Burning Equipment. The installation must comply with all local and national codes, regulations and authorities having jurisdiction regarding the installation of oil fired boilers.

For Canada refer to the guidelines of CSA/ CGA-B139 Installation Codes.

Gas boilers: The boiler installation must be performed by a qualified installer in accordance with regulations put forth in ANSI Z223.1/NFPA-54, National Fuel Gas Code. In Canada the requirements of CAN/ CSA B149, Installation Code for Gas Burning Appliances and Equipment have be observed.

1.3.1 Installation Guidelines

CAUTION: DANGER TO LIFE
from electric shock.

- Do not work on electrical components unless you have the required qualification.
- Do not work on electrical components unless you have the required qualification.
- Prior to opening the control: shut down the power supply by turning off the emergency shut-off switch or disengaging the heating system circuit breaker, and prevent from accidental reactivation.
- Observe all applicable installation guidelines.

CAUTION: DANGER TO LIFE
from explosion of volatile gases.

- Work on gas components must be carried out by qualified and authorized personnel only.

1.3.2 Boiler Room Guidelines

CAUTION: DANGER TO LIFE
from explosion of volatile gases.
If you notic a smell of gas there is a risk of explosion.

- Extinguish all open flames.
- Do not smoke.
- Do not use lighting.
- Prevent sparks. Do not operate electrical switches , including telephones, plugs or doorbells.
- Close the main gas shut-off valve.
- Open windows and doors.
- Warn all occupants, but do not use doorbells.
- Call gas company from outside the building.
- If you hear gas escaping, immediately leave the building, prevent others from entering and notify police and fire brigade from outside the building.

CAUTION: DANGER TO LIFE
from flue gas poisoning.
Insufficient combustion air can result in dangerous operation if combustion air is taken from indoors.

- Please observe that combustion air openings are not reduced in size or closed.
- Make sure that no mechanical air openings or devices remove combustion air from the boiler room such as central vacuum systems, dryers and air conditioning appliances.
- Make sure that the boiler is connected to a chimney or horizontal venting system that is capable of handling the slight positive breeching pressure.
- If any of these problems have not been corrected, the boiler must not be operated.
- Make the end-user aware of these guidelines and their potential danger.

CAUTION: FIRE DANGER
due to flammable or liquid materials.

- Make sure that flammable and liquid materials are not stored in the close vicinity of the boiler.

1.4 Tools, Materials and Accessories

For the installation and maintenance of the boiler you will need typical tools used in this industry.
In addition, the following components are useful:

- Hand truck with strap or boiler cart.
- Wood blocking.
- Cleaning brushes and/or chemical cleaning agents for wet cleaning.

If the boiler is delivered in sections, you will also require the following:

- Compression tool 1.2 if the boiler is supplied in sections (→ compression tool documentation).
- Flat board.
- Cleaning agent.
- Installation kit (accessory)
- Steel hammer and wooden or rubber mallet

- Half- round bastard file
- Screwdriver (Philips and slotted head)
- Flat chisel
- Wrench SW 19, 36, 13, 19, 18, 24, 27 and Allen key SW19
- Support wedge, flat iron
- Cleaning rags and cloth
- Fine emery cloth
- Wire brush
- 3-in-1 oil
- Cleaning agent, ruler, chalk, straight edge
- Blanking flange with vent facilitiy (for pressure test)

1.5 Disposal

- ▶ Please dispose of any trash in an environmentaly friendly fashion.
- ▶ Please discard properly of any heating system related components.

2 Product description

This installation and maintenance manual contains important information for the safe and intended installation, initial start-up and maintenance of this boiler.

The special oil or gas-fired boiler is generally referred to below as a boiler.

The installation and maintenance manual is provided for technicians who have been trained and have experience in working with heating systems and oil/gas fired installations.

2.1 Intended use

The Bosch Uni 5000F is designed for central heating and domestic hot water (DHW) systems, for instance in residential homes or apartment buildings, or small commercial applications.

2.2 Certification and testing mark

This appliance has been tested and certified to meet rules and regulations in place for the US and Canadian markets.

2.3 Notes on installation and operation

When installing and operating the heating system, it is the installer's responsibility to meet all applicable federal, state, and local codes.

2.4 Heating system water quality

Poor water quality can damage heating systems due to scale formation and corrosion.
Please refer to Chapter 2.8.7, Tab. 9 for further details of the water quality.

CAUTION: Risk of system damage due to unsuitable boiler water.

- If oxygen-permeable pipes are used, e.g. for radiant heating systems, the systems must be separated from the boiler by a heat exchanger. Unsuitable heating system water promotes sludge formation and corrosion. This can result in heating system malfunction and boiler damage.

2.5 Product description

The boiler is a low-temperature for oil or gas combustion appliance with automatic control panel or aquastat for boiler water temperature.

The boiler consists of:

- Boiler block with insulation
- Boiler jacket
- Control panel or aquastat

The controls monitor and control all electrical boiler components.

The boiler can alternatively be fitted with a simple aquastat control.

The boiler jacket prevents heat loss and acts as a noise insulator.

The boiler block transfers the heat generated by the burner to the heating water. The insulation prevents energy loss.

Suitable burners

CAUTION: Risk of system damage from use of incorrect burner.

- Only the burner provided may be employed with this boiler.

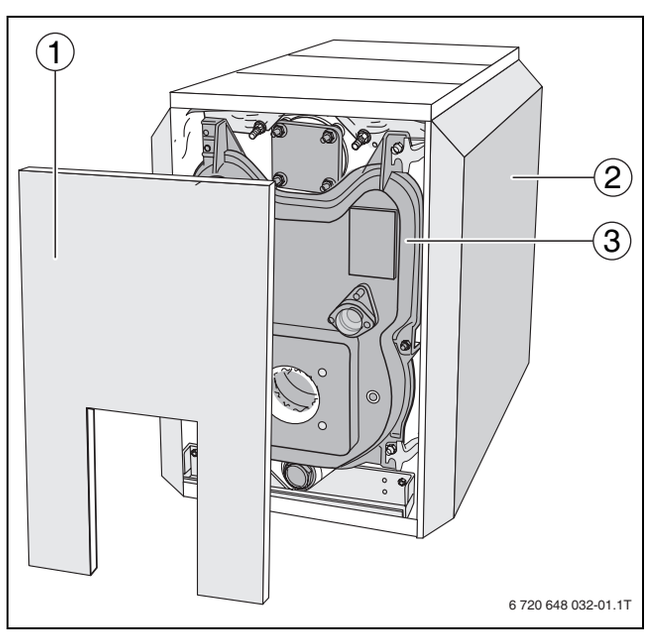

Fig. 1 Boiler without burner

1 Burner door casing
2 Boiler jacket
3 Boiler block with insulation

2.6 Pack contents

Upon delivery, check that the packaging is complete and undamaged.

Boiler as assembled block

Component	Qty	Packaging
Boiler block	1	1 pallet[1)]
Control panel or aquastat	1	1 box
Jacket Package:	**1**	**1 box on a pallet**
• Boiler jacket	1	1 box[1)]
• Insulation	1	1 box[1)]
• Burner door, burner door cover and assembly equipment[2)]	1	1 box[1)]
• Technical documents		1 plastic package
B-Kit components: • Supply manifold (11/4") • 30 psi (2 bar) relief valve • Boiler drain (¾ ") • Pressure/temperature gauge • 90°-elbow (¾ ") • Burner mounting studs and washers • Aquastat well (¾ ") • Bushing 1" x ¾ " • Plug 1"	1	1 package

Table 1 Package Contents

1) 1 pallet

2) The srew-in feet are in the burner door and burner door cover package.

Boiler in parts

Component	Qty	Packaging
Front, center and back sections	1	1 pallet[1)]
Control panel or aquastat	1	1 box
Jacket Package:	**1**	**1 box on a pallet**
• Fittings	1	1 box[1)]
• Boiler jacket	1	1 box[1)]
• Insulation	1	1 plastic package[1)]
• Burner door, burner door cover and assembly equipment[2)]	1	1 box[1)]
• Technical documents		1 plastic package
B-Kit components: • Supply manifold (11/4") • 30 psi (2 bar) relief valve • Boiler drain (¾ ") • Pressure/temperature gauge • 90°-elbow (¾ ") • Burner mounting studs and washers • Aquastat well (¾ ") • Bushing 1" x ¾ " • Plug 1"	1	1 package

Table 2 Package Contents

1) 1 pallet

2) The srew-in feet are in the burner door and burner door cover package.

2.7 Dimensions Specifications

2.7.1 Bosch Uni 5000F dimensions

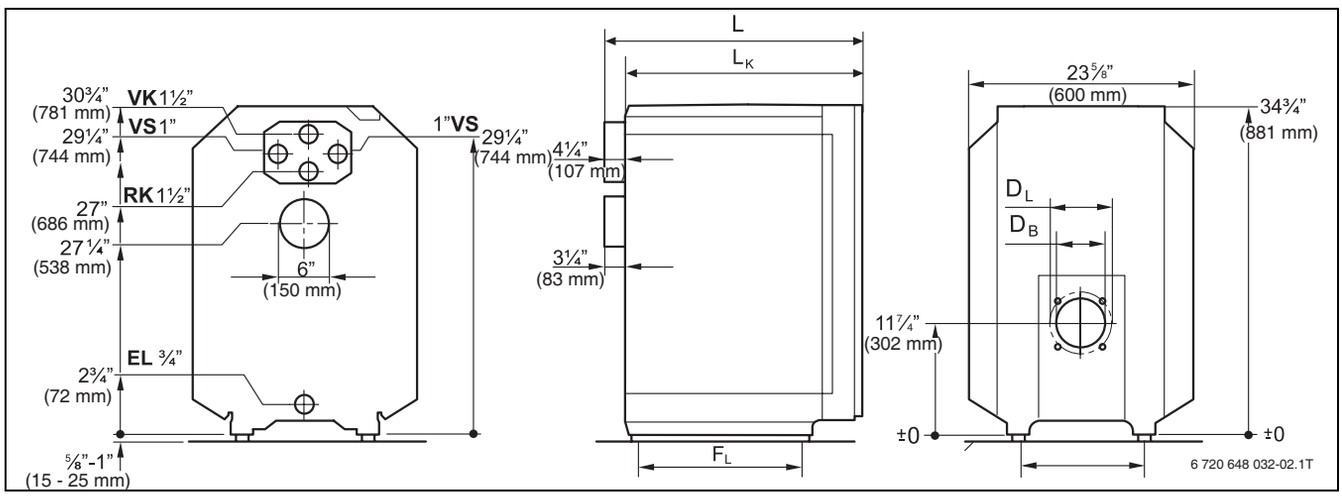

Fig. 2 Connections and dimensions (measurements in inches (mm))

VK = Boiler supply
RK = Boiler return
EL = Boiler drain (connection for drain valve)
VS = Hot water tank supply

Connections and dimensions:

Boiler model	Unit	Uni 171	Uni 207	Uni 256
Boiler sections	**Number**	4	5	6
Heating capacity (gross output)	**Btu/hr**	171,000	207,000	256,000
	(kW)	(50)	(60)	(75)
Thermal output (net IBR output)	**Btu/hr**	149,000	180,000	223,000
	(kW)	(43)	(52)	(65)
Boiler water content	**Gal**	approx. 16.1	approx. 19.3	approx. 22.5
	(l) [Liter]	(61)	(73)	(85)
Gas capacity	**cu.ft.**	1.73	2.10	2.48
	(l) [Liter]	(68.8)	(85,1)	(101,4)
Oil firing rate	**GPH**	1.4	1.7	2.1
	(kg/h)	(4,5)	(5,4)	(6,7)
Maximum input rating Gas	**Btu/hr**	164,000	199,000	245,000
	(kW)	(48)	(58)	(72)
Hot gas resistance	**psi**	0.0023–0.0078		
	(Pa)	(15,86 - 53,78)		
Permissible max. supply temperature[1)]	**°F**	248		
	(°C)	(120)		
Allowable operating pressure	**psi**	58		
	(bar)	(4)		
Maximum time constant of thermostat and high limit safety cut-out (STB)	**s**	40		

Table 3 Technical data for boilers without burners

1) Limit (safety temperature limiter, STB)
Maximum permitted flow temperature = Safety limit (STB) - 32 °F (18 K)
Example: Safety limit (STB) = 212 °F (100 °C), maximum permitted flow temperature = 212 ° (100 °C) - 32 ° (18 K) = 180 °F (82 °C)
The safety limit must meet the national regulations of the country concerned.

Boiler model	Unit	Uni 171	Uni 207	Uni 256
Boiler overall length (L)	**Inch**	31	35 ¾	40 ½
	(mm)	(787)	(907)	(1027)
Boiler block length (L_K)	**Inch**	26 ¾	31 ½	36 ¼
	(mm)	(680)	(907)	(920)
Boiler section insert (width; height; depth)	**Inch**	–		18 1/8; 32 ¼ ; 5 7/8
	(mm)			(460 / 820 / 150)
Boiler block insert (width; height; depth)	**Inch**	18 1/8; 32 ¼ ; Length LK		
	(mm)	(460 / 820)		
Combustion chamber length	**Inch**	21 ½	26 ¼	31
	(mm)	(546)	(668)	(788)
Combustion chamber diameter	**Inch**	13 ¼		
	(mm)	(337)		
Burner door thickness	**Inch**	3 ¾		
	(mm)	(95)		
Burner pipe diameter (DB)	**Inch**	4 3/8		
	(mm)	(112)		
Hole circle diameter (DL)	**Inch**	5 7/8		
	(mm)	(150)		
Distance between boiler feet (F_L)	**Inch**	18	22 ¾	27 ¼
	(mm)	(455)	(575)	(695)
Net weight[1)]–	**Lbs**	500	600	700
	(kg)	(227)	(272)	(317)

Table 4 Dimensions, weight and other data for boilers without burners

1) Incl. packaging material approx. 6-8 % more

2.8 Conditions for operation

Maintaining the specified operating conditions will enable the boiler to provide a high level of reliability and long service life.

CAUTION: Risk of system damage if operating conditions are not maintained.
Irreversible damage to individual components of the boiler as a whole or the heating system may occur.

- The information on the rating plate is binding and must be observed.

2.8.1 General operating conditions

Operating conditions			
Min. boiler water temperature	Operating interruption (complete boiler shutdown)	heating circuit with heating circuit mixing valve[1)]	Min. return temperature
In combination with control for variable low-temperature operating modes.			
If heating zones or a boiler circuit actuator cannot be regulated via the control device (for example pump logic), an operating temperature of 122 °F (50 °C) must be reached within 10 min of switching the burner ON by restricting the water volume flow.	Possible if, after interruption of the operation, there is at least 3 hours heating operation.	not required but recommended with low-temperature heating system design 130/113 °F (55 / 45 °C) Required with: • Underfloor heating systems • Systems with high water content: > 115° gal/MBH (>15 l/kW) (1 MBH = 100.000 Btu/hr)	not required, except for operation with a modulating burner for: • Oil combustion: 113 °F (45 °C) • Gas combustion: 130 °F (55 °C)
In conjunction with a controls for constant boiler water temperatures or with supplementary external programmer and aquastat			
150 °F[2)] (65 °C[2)])	possible if, after interruption of the operation, there is at least 3 hours heating operation	required	Required with: • Systems with high water content > 115 gal/MBH: 130 °F (15 l/kW: 55 °C) • Operation with a modulating burner: 130 °F (55 °C)

Table 5 General operating conditions

1) A heating circuit with a mixing valve improves controllability and is specifically recommended for systems with several heating zones.

2) Boiler water temperature control setting: when the boiler is in ON mode, the minimum boiler water temperature in the boiler must be reached within 10 minutes, e.g. by flow rate limitation, and maintained as the minimum temperature.^

2.8.2 Conditions for the boiler room and the environment

Operating conditions		Notes – Requirement in greater detail
Temperature in the boiler room	+40 (+5 °C) to +104 °F (+40 °C)	
relative humidity	max. 90 %	No condensation or precipitation inside the boiler room
Dust/airborne particles	–	**Excessive dust inside the boiler room must be avoided when the boiler is operating, e. g.:** • Dust from building work **Combustion air supplied from outside must not be excessively loaded with dust or airborne particles; if necessary, air filters should be fitted in case**: • Air supply contaminated with dust from dirt roads and paths. • Air supply contaminated with dust from production and processing facilities, e. g. quarries, mines, etc. • Airborne particles from thistles and similar
Halogenated-hydrocarbon compounds	–	**The combustion air must be free from halogenated-hydrocarbon compounds.** • Identify the source of halogen-hydrocarbon compounds and seal it off. Where this is impossible, route combustion air from areas that are not contaminated by halogen-hydrocarbon compounds.

Table 6 Boiler room and ambient conditions

Operating conditions		Notes – Requirement in greater detail
Fans that extract air from the boiler room.	–	During burner operation, no mechanical air handling equipment may be operated that could extract combustion air from the boiler room, e.g.: • Exhaust hood • Tumble dryer • Ventilation equipment
Small animals	–	Prevent small animals from entering the boiler room, particularly through the air inlet vents – by fitting them with screens.
Fire safety	–	Maintain clearances between the boiler and flammable materials in accordance with local regulations. A minimum clearance of 16" is required. Never store flammable materials or liquids in the vicinity of the boiler.
Flooding	–	In case of an acute risk of flooding, disconnect the boiler in time from its fuel and power supply before water enters the room. Any components or control equipment, which came in contact with flood water, must be replaced before re-commissioning.

Table 6 Boiler room and ambient conditions

2.8.3 Combustion air supply conditions

Operating conditions	Boiler output (in case of multi-boiler systems = total output)	Ventilation air cross-section in square inches (unrestricted aperture)
Air intake flow cross-section for combustion air drawn from outside (divided between max. 2 apertures)	< 170,000 Btu/hr (< 50 kW)	At least 23.25 square inches (150 cm^2)
	> 170,000 Btu/hr (> 50 kW)	At least 23.25 (150 cm^2) square inches and also 0.91 square inches (6 cm^2) per 10,000 Btu/hr (3 kW), that is above 170,000 Btu/hr (50 kW)

Table 7 Observe national regulations for boilers which draw their air supply from the boiler room.

2.8.4 Conditions, Fuel

Operating conditions		Notes – Requirement in greater detail
Permissible fuels for boilers without integral burners	–	This boiler can be operated with following fuels. Select a burner that is suitable for one of these fuel types: • Fuel oil in accordance with the burner specification. If a poorer quality oil (kinematic viscosity > 0.0093 sq in/sec (> 45.5 s Sayboldt) at 68 °F) is used, the maintenance and cleaning periods must be reduced. In that case, carry out maintenance and cleaning procedures at least twice a year. • Natural gas in accordance with the burner specification • LPG in accordance with the burner specification
Contamination	–	Free of contaminants (for example dust, mist, humidity), i. e. a constant operation will not lead to accumulation of deposits, in valves, strainers and filters and could lead to service calls.

Table 8 Fuels

2.8.5 burner selection

Oil burner

boiler size	burner manufacturer	burner model	nozzle	pump pressure
Uni 171	Riello	40F5	1.25 x 80 B	145 Psi (10 bar)
Uni 207		40F10	1.50 x 80 W	145 Psi (10 bar)
Uni 256		40F10	1.75 x 45 B	185 Psi (12,75 bar)
Uni 171	Bekett	AFG	H 1.10 x 45 ES	175 Psi (12 bar))
Uni 207		CF375	H 1.35 x 45 ES	170 Psi (11,7 bar)
Uni 256		CF375	H 1.75 x 45 ES	140 Psi (9,6 bar)
Uni 171	Carlin	99 FRD	D 1.25 x 60 B	150 Psi (10,3 bar)
Uni 207		99 FRD	D 1.50 x 60 B	150 Psi (10,3 bar)

Table 9 Oil burner

Gas burner

boiler size	burner manufacturer	burner model	orifice		manifold pressure	
			natural	propane	natural	propane
Uni 171	Riello	40G200	2.00 mm	1.30 mm	1.75" WC (436 Pa)	2.60" WC (647 Pa)
Uni 207		40G400	2.20 mm	1.50 mm	0.95" WC (236.5 Pa)	1.30" WC (323.5 Pa)
Uni 256		40G400	2.20 mm	1.50 mm	1.30" WC (323.5 Pa)	1.70" WC (423.5 Pa)

Table 10 Gas burner

2.8.6 Conditions power supply

Operating conditions		Notes – Requirement in greater detail
Power supply voltage	110–120 V	Observe the voltage range of the burner and controls used. The outer casing/boiler must be grounded for safety reasons and in order to function correctly.
Fuse	10 A	
Frequency	60 Hz	Sinusoidal voltage curve
Protection	–	IP 40 (protected against contact by entry of foreign objects > 0.04 inches Ø (> 1 mm Ø), no water proofing)

Table 11 Power supply

2.8.7 Conditions for hydraulic system and water quality

Operating conditions		Notes – Requirement in greater detail
Operating pressure (overpressure)	15 – 58 psi (1,0 - 4,0 bar)	Maximum 30 psi (2 bar) with the supplied safety valve.
Permissible site test pressure	45 – 75 psi (3,1 - 5,2 bar)	
Safety temperature limitation by TR temperature control	122 – 194 °F (50 - 90 °C)	
Safety temperature limitation by manual reset high limit (STB)	212 – 248 °F (100 - 120 °C)	On some controls adjustable on site from 212 (100 °C) to 248 °F (120 °C).
Water quality	–	The heating system may only be filled and topped up with water of domestic water quality. We recommend a pH value of 8.2 – 9.5.

Table 12 System configuration and water quality

3 Moving the boiler

This chapter details how to move the boiler safely.



CAUTION: Risk of system damage from impact.

Fragile components could be damaged.

- Observe the transport instructions on the packaging.



CAUTION: Risk of injury if load is inadequately secured during transportation.

- Use suitable means of transportation, e.g. the Bosch boiler hand truck with strap.
- Secure the load against falling.



Protect boiler connections from damage and dirt if the boiler is not installed immediately.



Dispose of packaging in an environmentally responsible manner.

4 Installing the boiler

This chapter describes how to install and place the boiler in the boiler room.

CAUTION: Risk of system damage from freezing.
- ▶ Install the heating system in a frost-free room.

4.1 Wall clearances

Position the boiler with the recommended wall clearances. Reducing the minimum clearances makes the boiler more difficult to access during installation, maintenance and cleaning.

The boiler base or foundation must be perfectly flat and level.

The burner door is factory-fitted with the hinges on the right. The burner door can be converted to open to the left.

Dimension	Wall clearance	
A	Recommended	51 1/8" (1300 mm)
	minimum	39 3/8" (1000 mm)
B	Recommended	27 ½ " (700 mm)
	minimum	15 ¾ " (400 mm)
C	Recommended	15 ¾ " (400 mm)
	minimum	3 7/8" (100 mm)
L_K	see "Technical Data" chapter	

Table 13 Recommended and minimum wall clearances (dimensions in inches).

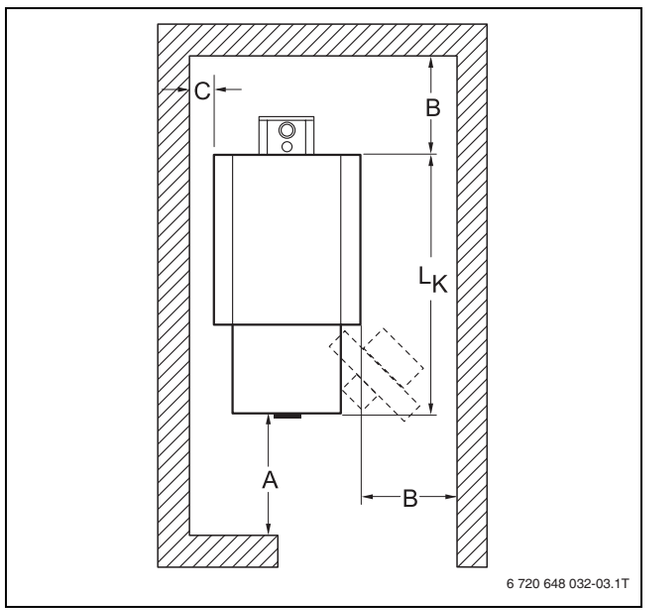

Fig. 3 Boiler room clearances (boiler positioned on the l.h. or r.h. side)

The boilers are designed for a side clearance of 6" (150 mm).
Where applicable, allow extra wall clearances for additional components such as DHW tank, pipe connections, flue gas silencer or other flue components, etc.

CAUTION: Risk of fire from flammable materials or liquids.
- ▶ Clearances less than 6" (150 mm) must comply with local and statutory codes.
- ▶ Make sure that there is a sufficient clearance between combustible materials and the chimney connection as specified by NFPA 31 (distance of 18 " (460 mm)).
- ▶ The floor must comply with the requirements of NFPA 31.

5 Boiler block assembly

CAUTION: Risk of injury by not securing the boiler adequately during transport.
- Use only suitable means for transportation, e.g. a trolley with strap, a stair or step trolley.
- Secure the load against falling.

The on-site installlation is carried out using individual sections if, because of physical limitations, a boiler block cannot be assembled as a complete unit.

For installation of boiler supplied fully assembled (→ Chapter 7.3, page 36).

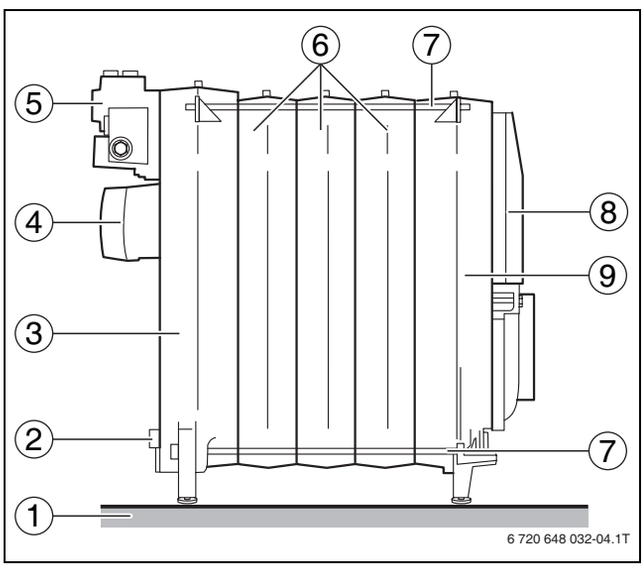

Fig. 4 Boiler block in the assembled state

1 Foundation/installation location
2 Drain
3 Back section
4 Flue outlet
5 Connecting block
6 Central sections
7 Anchor rods
8 Burner door
9 Front section

5.1 Assembly when delivered in sections

- Assembly all boiler sections in accordance with the following instructions and diagrams.

5.1.1 Preparing boiler sections

CAUTION: Risk to health or danger of burns due to released vapors and easily flammable cleaning agents.
- When using red lead putty, adhesives and solvents ensure adequate ventilation inside the installation room.
- When using solvents, avoid open flames, incandescence and sparks.
- Please observe the manufacturer‘s handling and safety instructions.

- Position the rear section onto two wood blocks.
- Clean the boiler hubs with sandpaper and a rag.
- Remove any burrs with a file.
- Clean the packing spring or packing groove with a wire brush and rag.

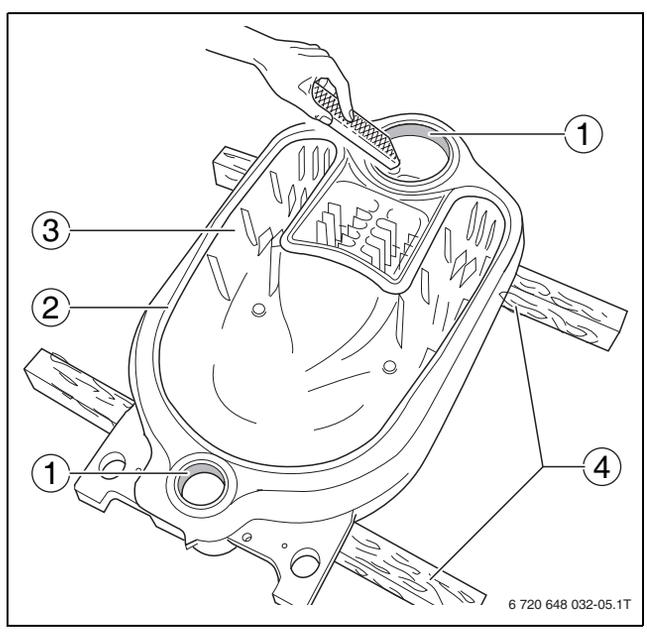

Fig. 5 Remove burrs

1 Boiler hubs
2 Sealing spring
3 Back section
4 Wood blocks

- Clean the hub sealing faces with a rag soaked in cleaning agent.

- Evenly coat the boiler hub sealing faces with red lead putty.
- Coat the packing spring or packing groove with adhesive (adhesive base).

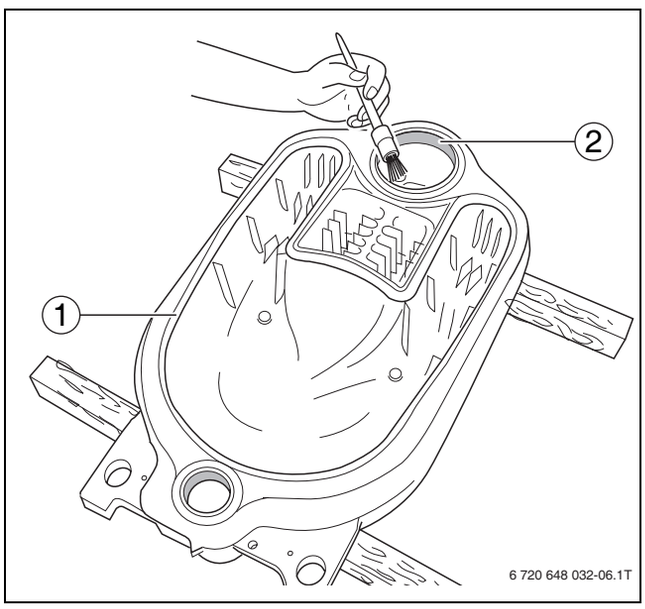

Fig. 6 Coat boiler hubs with red lead putty

1 Sealing spring
2 Boiler hub sealing face

5.1.2 Preparing push nippples and nipple ports

- Clean the nipples with a cloth soaked in cleaning agent.
- Evenly coat the nipples with red lead putty.
- Place nipple straight in the top and bottom boiler hub of the back section and hammer in a crosswise pattern.

After driving in the nipple leave it projecting approx. 1 1/8" (30 mm) from the boiler hub.

- Remove any burrs with a file.

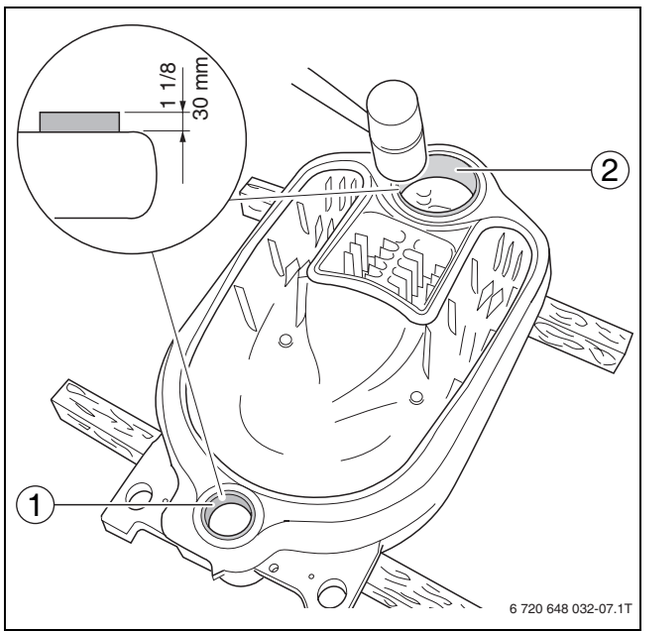

Fig. 7 Driving nipples home

1 Nipple in bottom boiler hub
2 Nipple in the upper boiler hub

5.1.3 Preparing the intermediate section

- Prepare the central section in the same way as the back section (→ Chapter 5.1.1, page 17).

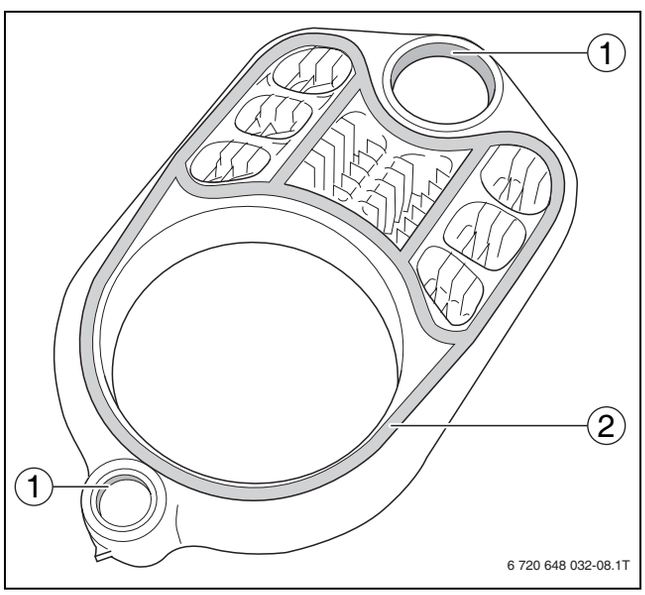

Fig. 8 Preparing the central section

1 Boiler hub sealing face
2 Packing grooves

5.1.4 Inserting the section sealing

CAUTION: System damage from leaking boiler sections.

- Never stretch the sealing rope during application to ensure that the faces between the boiler sections are sealed correctly.
- Carefully insert the sealing rope into the boiler section packing grooves.

- Unroll the required length of section sealing from the roll supplied.
- Peel the backing paper from the sealing rope as you insert the cord into the packing groove.
- Insert the flexible sealing rope into the packing groove starting in the upper boiler hub area, and lightly press in.
- Overlap sealing rope 3/4" (20 mm) at the joins and press in well.

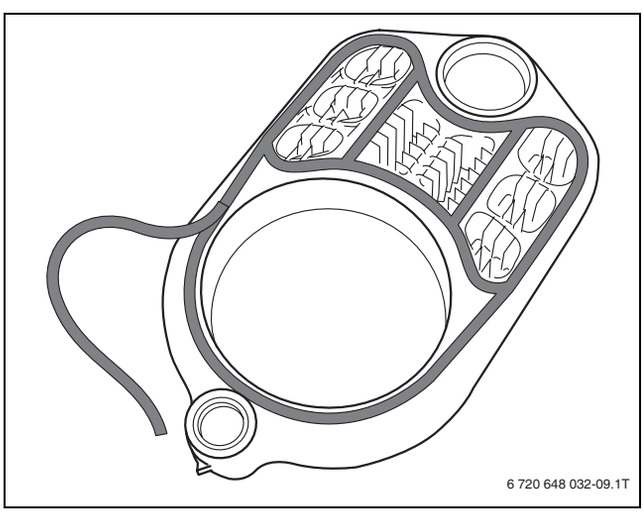

Fig. 9 Inserting the section sealing rope

5.1.5 Knock intermediate section into place

- Turn the intermediate section around and locate with the upper and lower boiler hubs on the nipples of the rear section.
- Drive the intermediate section onto the rear section using a wood or a rubber mallet.

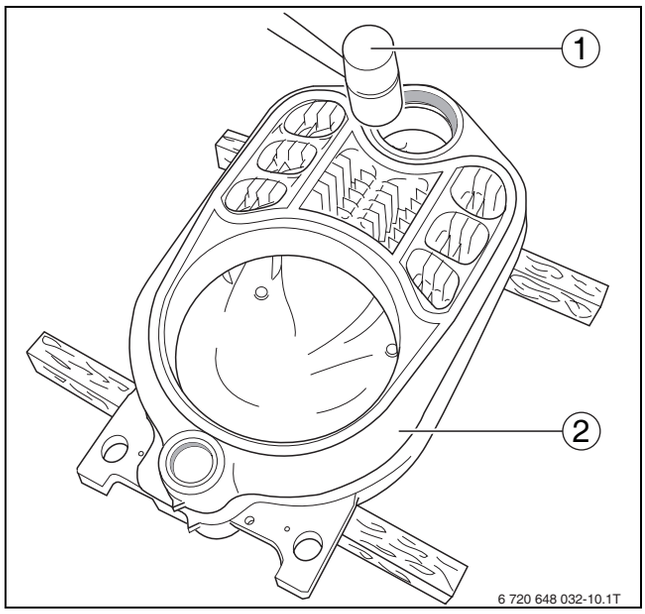

Fig. 10 Knock intermediate section into place

1 Wood or rubber mallet
2 Rear section

5.1.6 Boiler section alignment

CAUTION: Risk of injury from inadequately secured boiler sections.

- Secure the boiler block section against tipping.

- Position the partly assembled block of two boiler sections.
- Position a flat board underneath the center section so that the boiler block is slightly tilted for the continuing assembly.

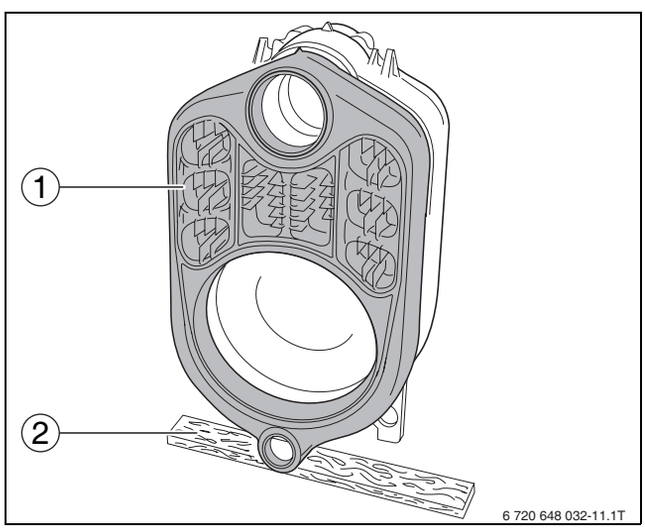

Fig. 11 Installing boiler block section

1 Center section
2 Flat board

5.1.7 Join boiler sections by the nipples at the top and bottom boiler hub

CAUTION: Boiler damage due to unsuitable compression tool.

- Use only the compression tool size 1.2 (→ documents for compression tool) suitable for the boiler.

CAUTION: Compression tool damage

The compression tool may be damaged or destroyed, if you compress pull rods with loose threaded connections.

- Check the threated connection of the pull rods after every compression, and tighten, if required. The pull rod is correctly positioned if it is fully inserted and no thread is showing.
- Keep the thread of the compression tool clean. Dirty threads can damage the compression tool during compression.

CAUTION: Boiler damage due to incorrectly positioned auxiliary flange.

Leaks may occur if the auxiliary flange sits in the packing spring/groove of the boiler section during the compression process.

- Ensure that the auxiliary flange lies level on the boiler hubs.

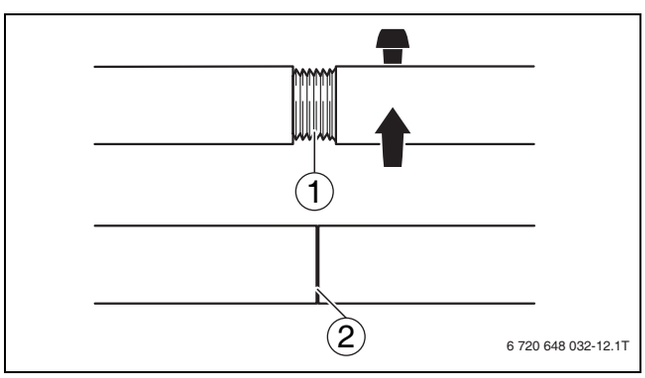

Fig. 12 Making the pull rod threaded connection

1 Pull rod threaded connection (incorrectly joined)
2 Pull rod threaded connection (correctly joined)

- Push on pull rod each through the lower and the upper boiler hub of the partly assembled block.
- Push the auxiliary flange onto the pull rods of the lower and upper boiler hubs.
- Push the mating flange onto the pull rod of the lower and upper boiler hubs, and secure with the respective wedges.
- Thread the compression units onto the pull rod threads.

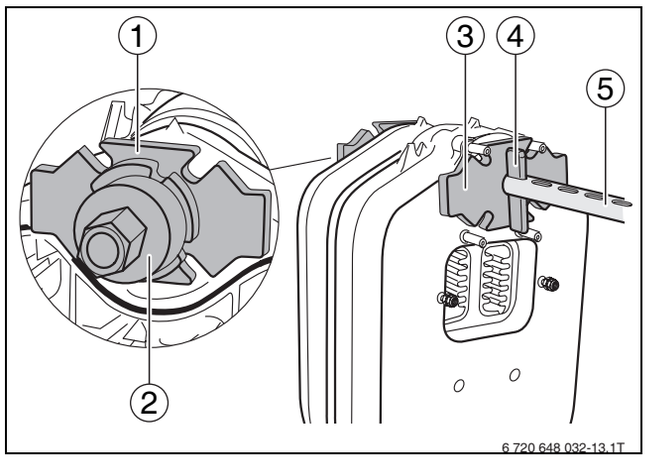

Fig. 13 Compression tool assembled at the upper boiler hub

1 Auxiliary flange (Ø 5 3/8" x 1" (Ø 135 x 25 mm) top boiler hub)
2 Compression unit
3 Mating flange (Ø 5 3/8" x 1" (Ø 135 x 25 mm) top boiler hub)
4 Wedge
5 Pull rod in the upper boiler hub

Push the compression units far enough onto the pull rod threads that two thread windings protrude from the compression units.

- Hold the pull rods at the center of the boiler hubs and slightly draw together the compression tools using the compression unit.

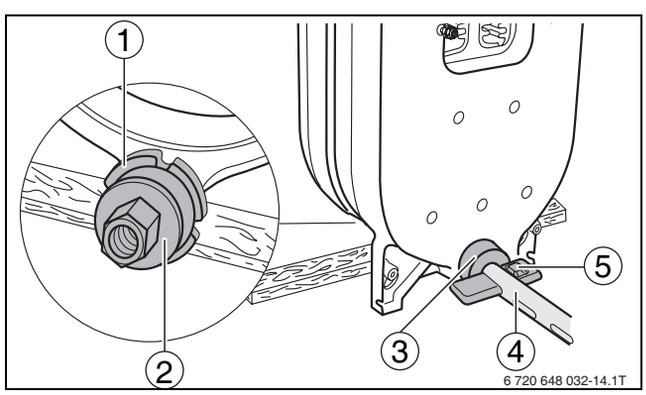

Fig. 14 Compression tool assembled at the lower boiler hub

1 Auxiliary flange h (Ø 3 1/8" x 1" (Ø 80 x 25 mm))
2 Compression unit
3 Mating flange (Ø 3 1/8" x 1" (Ø 80 x 25 mm)bottom boiler hub)
4 Pull rod in the bottom boiler hub
5 Wedge

- Set both ratchet wrenches on the clamping nuts of the compression units and press the boiler sections together by evenly tightening the nuts.

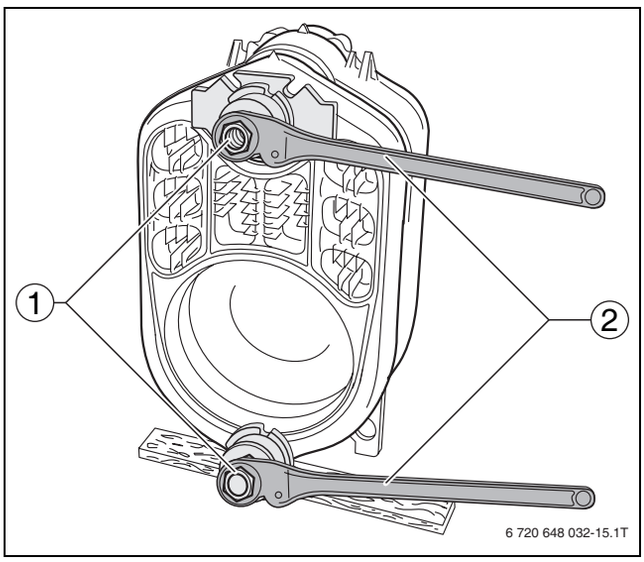

Fig. 15 Positioning ratchet

1 Clamping nut
2 Ratchet

CAUTION: Boiler damage due to leaking boiler sections.
- For each compression procedure ensure thatno more than one nipple joint (one nipple joint comprises two sections) is compressed.
- Never jam nipples into the boiler hubs of the boiler section.
- Stop pressing the sections together when the boiler hubs meet.

- Release and remove the compression tool.
- Hammer the nipples into the assembled boiler block (→ Chapter 5.1.2, page 18).
- Prepare all other intermediate sections as described above and join them at the nipples.

Fitting the front section

Due to the threaded studs, do not use the auxiliary flange at the front of the upper boiler hub when assembling the front section.

- Push the pull rod together with the compression unit through the upper boiler hub.
- Carry out all other steps as described (→ Chapter 5.1.7, page 20).

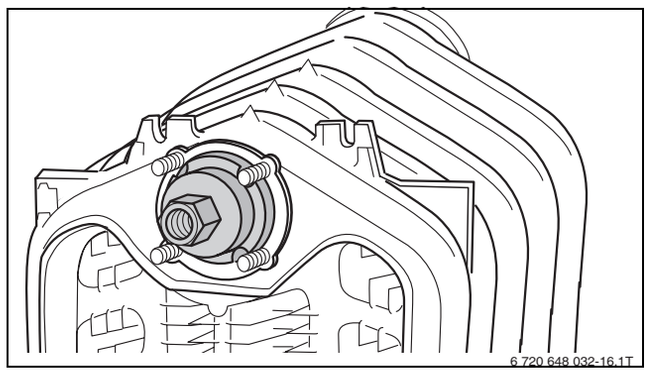

Fig. 16 Fit the compression tool to the front section

5.1.8 Fitting the anchor rods

CAUTION: System damage due to incorrect spring washer assembly.
- Ensure that the spring washers are arranged opposite each other on the anchor rods.

Insert the anchor rods before removing the compression tool.
Never remove the compression tool first.

- Insert the anchor rods with spring washers into the case cams on the l.h. and r.h. side as well as adjacent to the lower boiler hubs.

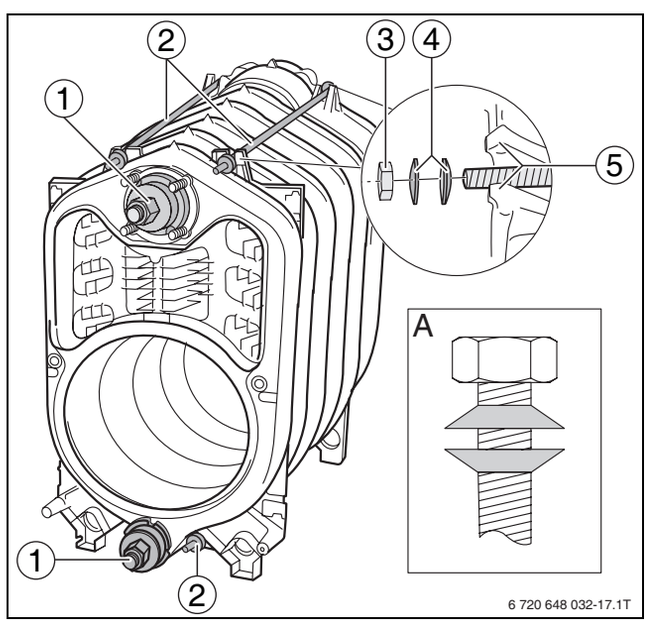

Fig. 17 Ankerstangen montieren

1 Compression tool
2 Anchor rods
3 Nut
4 Spring washers
5 Cast lugs
A Spring washer arrangement

- ▸ Tighten the nuts on the anchor rod threads by hand.
- ▸ Tighten the nuts 1 to 1 ½ turns on the anchor rods.
- ▸ Release and remove the compression tool.

5.1.9 Fitting distribution tube and supply/return header

The distribution tube, the supply/return header and the sensor well are already assembled if the boiler block is supplied as a ready assembled unit.

Before installation of the supply/return header, first push the distribution tube from the boiler front into the boiler (do not forget the boiler hub flat gasket) if insufficient space is available behind the boiler.

- ▸ Secure the distribution tube to the supply/return header with M8 x 16 screws and flat gaskets.

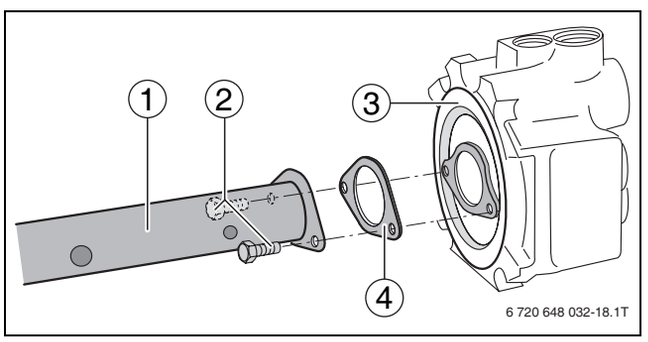

Fig. 18 Fitting feed pipe on supply/return header

1 Distribution tube
2 M8 x 16 (brass)
3 Flat gasket
4 Supply/return header

- ▸ Remove the nuts from the threaded studs.
- ▸ Push the flat gasket over the distribution tube.
- ▸ Push the feed pipe with the supply/return header and flat gasket into the upper boiler hub at the boiler back.

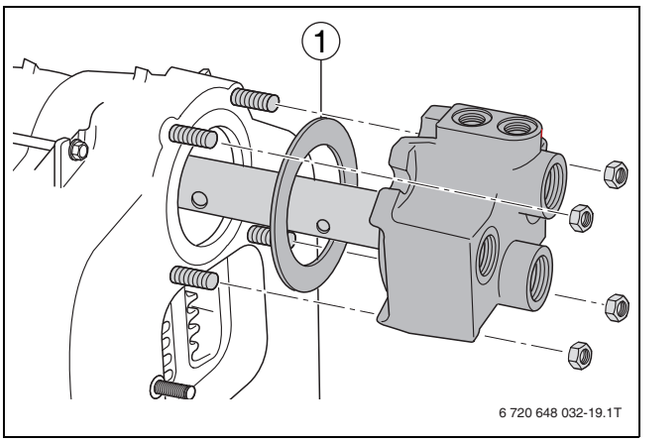

Fig. 19 Fitting feed pipe and supply/return header

1 Flat gasket

- ▸ Position the supply/return header on the threaded studs and tighten four nuty by hand.
- ▸ Evenly tighten the supply/return header nuts diagonally using a torque wrench (torque: maximum 44 lbs-ft (60 Nm)).

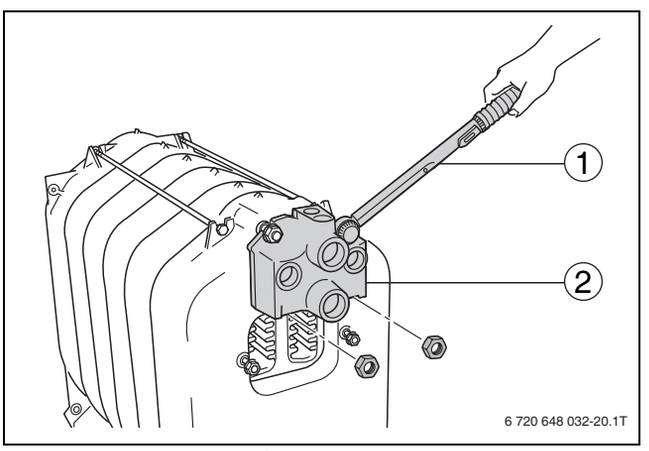

Fig. 20 Fitting supply/return header

1 Torque wrench
2 Suply/return header

Seal connections which are not required with the plugs supplied. When the boiler is supplied as a ready assembled block, these plugs have already been fitted.

- ▸ Insert plugs with flat gaskets into the connections that are not required.

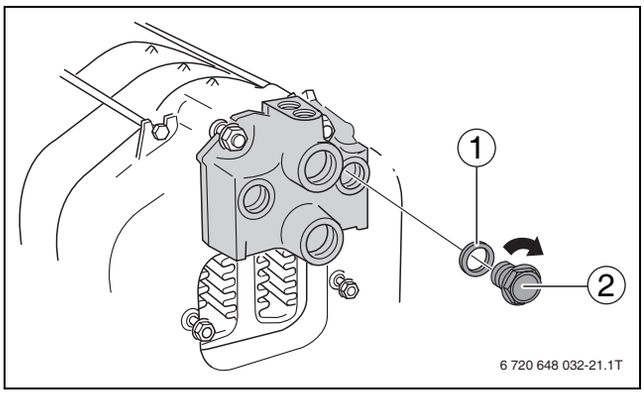

Fig. 21 Seal connections that are not required

1 Flat gaskets
2 Plug

5.1.10 Sealing the sensor well

- Seal sensor well R¾ from above in the Rp¾ " well threaded hole of the test port of the connection block.

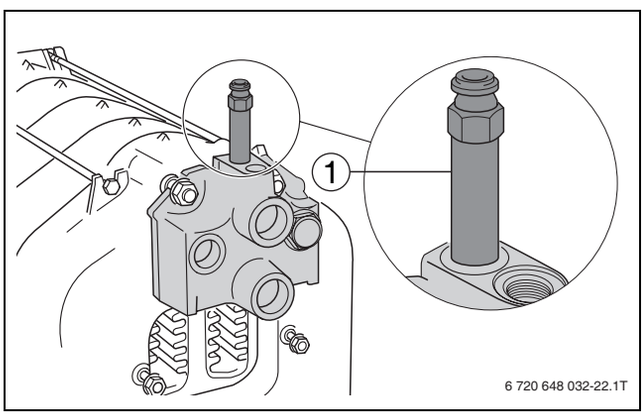

Fig. 22 Sealing the sensor well

1 Sensor well

5.1.11 Positioning the flue outlet

The flue come with sealing rope already fitted.

- Remove the washers and nuts from the threaded studs.
- Position the flue outlet on both threaded studs on the back saction and secure with nuts.

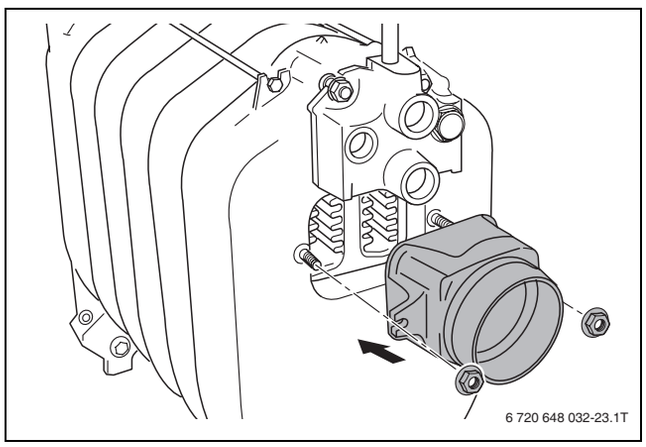

Fig. 23 Fitting the flue outlet

5.1.12 Sealing boiler hubs

The reducer included with the B-Kit is required for fitting the boiler fill and drain valve (boiler fill & drain valve). The boiler fill & drain valve is also a component of the B-Kit.

- Seal the reducer with teflon tape or paste into the bottom boiler hub at the back of the boiler.
- Install the boiler fill & drain valve on the reducer.

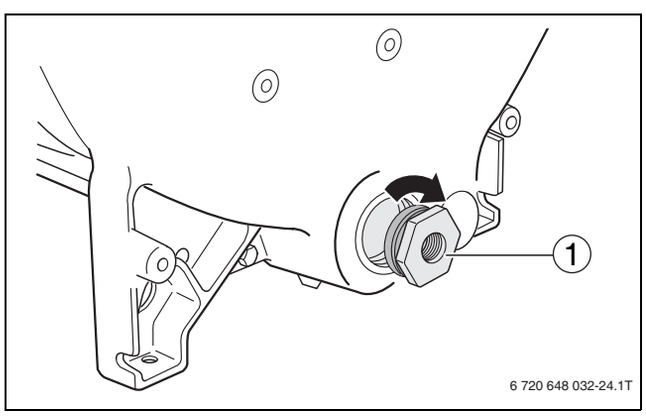

Fig. 24 Sealing the reducer

1 Reducer

- Close the top boiler hub on the front section with the blank flange.
- Screw in the plug with the flat gasket into the lower boiler hub.

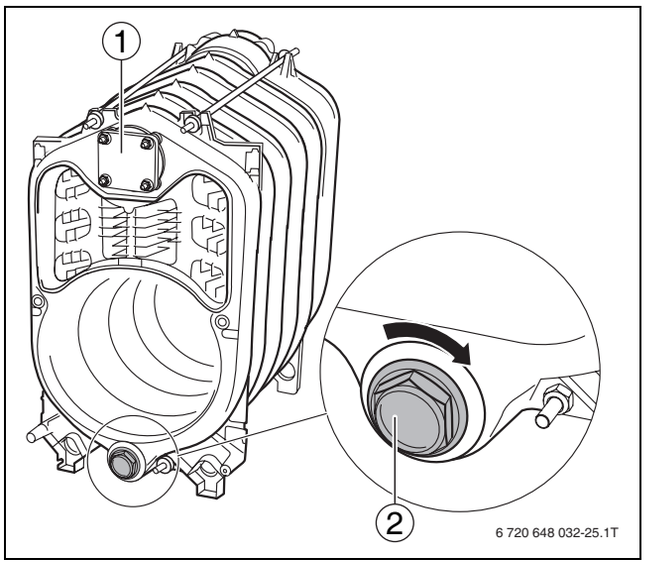

Fig. 25 Seal boiler hubs at the front section

1 Blank flange
2 Plug

5.2 Check for leaks

Conduct a leak test of the boiler block only when the boiler was delivered disassembled.

5.2.1 Preparing for a leak test).

- Close all boiler hubs (→ Chapter 5.1.12, page 23).
- Close front and back connections (fit vent to the Rp¾ connection block; → Fig. 22, page 23).

5.2.2 Leak test

CAUTION: System damage due to overpressure.
- Ensure that no pressure, control or safety equipment is fitted.

Please note the rating plate details. Use a pressure gauge class 1.0 for the pressure test.

Carry out the leak test with a test pressure of 84 psi (5,8 bar) (in accordance with the requirements of the European Pressure Vessel Directive).

- Slowly fill the boiler block via the boiler fill & drain valve. Vent at the highest point of the system, until water flows out of the air vent valve.

If hub joints are leaking:

- Drain the water through the boiler fill & drain valve.
- Remove the water pipes.
- Remove the distribution tube.
- Release and remove the anchor rods.
- Separate the leaking boiler by driving flat wedges or chisels into the leaking part.

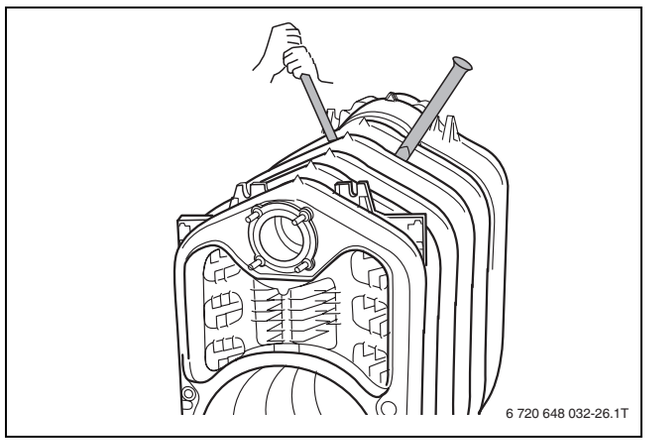

Fig. 26 Separate the boiler block

- Clean the hubs before reassembly.

Use new nipples and new sealing rope for the reassembly.

- Compress the boiler block again.
- Fit the anchor rods and feed pipe.
- Install the water pipework.
- Repeat the leak test.

For subsequent installation of the boiler see (→ Chapter 5.3, page 24).

5.3 Installation when the boiler is supplied assembled

WARNING: Danger to life due to falling material.
- Ensure that a suitable means of supporting the load is available.
- Observe all locally applicable Occupational Health & Safety regulations regarding lifting equipment.

A leak test of the boiler block is carried out at the factory when the boiler is supplied assembled.

- Cut through the stapes.
- Remove the pallet prior to positioning the boiler block.

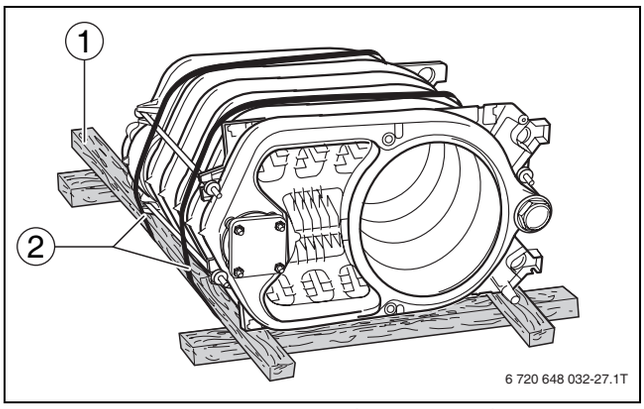

Fig. 27 Boiler block on pallet (as delivered)

1 Pallet
2 Securing straps

5.4 Installation steps for disassembled and assembled delivery

Carry out the steps detailed in this chapter for deliveries in sections or as block. Where there are different procedures for installation between disassembled and assembled delivery, this noted in the manual.

5.4.1 Fitting adjustable feet

Use the adjustable feet (packaging → Chapter 2.6, page 8) to adjust the boiler to a horizontal position to prevent air from collecting in the boiler.

- ▸ Tip the boiler or support it on a wood block.
- ▸ Screw the adjustable feet 0.20 – 0.40 inches (5 - 10 mm).

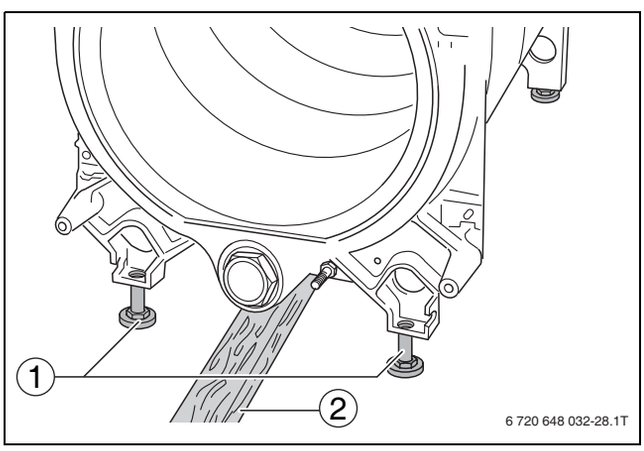

Fig. 28 Fitting adjustable feet

1 Front feet
2 Wood block

- ▸ Gently set the boiler down.

5.4.2 Insert the flue gas baffle plates

- ▸ Remove the corrugated cardboad packaging when the block is supplied ready assembled.

-or-

- ▸ Remove the flue gas baffles plates from the carton containing the small iron fillings when the boiler is supplied in sections.

The cast lugs should point towards the center of the boiler

- ▸ Install the flue gas baffle plates in accordance with the following table into the central second flue gas pass.

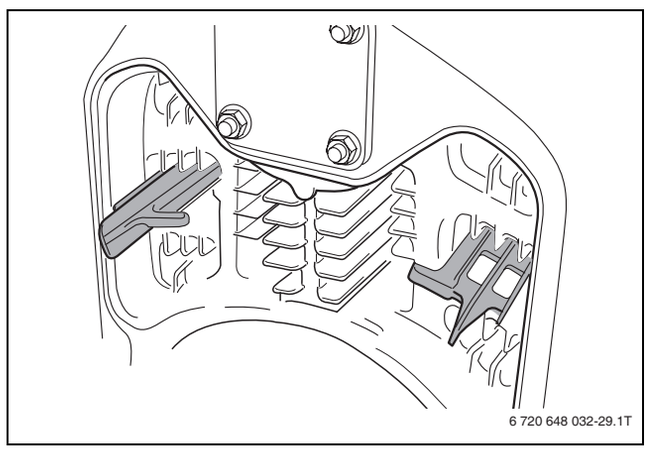

Fig. 29 Flue gas baffle plates into the second flue gas pass (here: centrally)

The cast lugs should point outwards.

- ▸ Install flue gas baffle plates in accordance with the following table into the third flue gas pass.

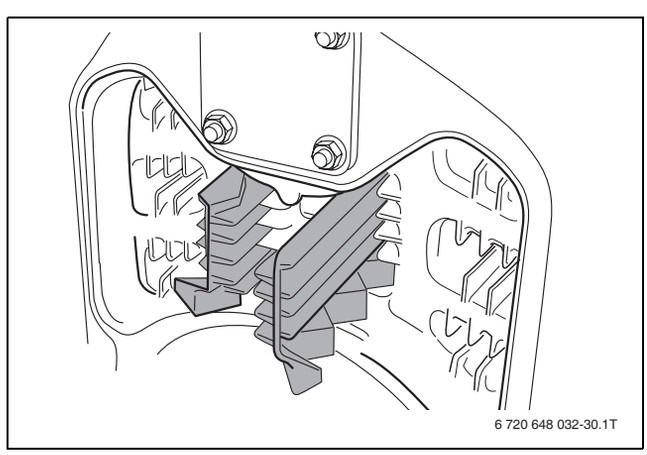

Fig. 30 Flue gas baffle plates into the third flue gas pass

Boiler section		4	5	6
2nd flue gas pass	top	-	-	-
	center	-	2	-
	bottom	-	2	-
3rd flue gas pass		2	-	-

Table 14 Arrangement of the flue gas baffle plates

The flue gas temperature can be increased by removing the flue gas baffle plates (→ Chapter 7.6.1, page 37).

5.4.3 Installing the burner door

CAUTION: System damage due to leaking burner door.

- Tighten the hexagon bolts of the burner door evenly.

The burner door can be mounted either on the r.h. side and on the l.h. side. Installation on the r.h. side is described below.

- Screw the two hinge pins to the front section with one M12 x 35 hexagon bolt each.

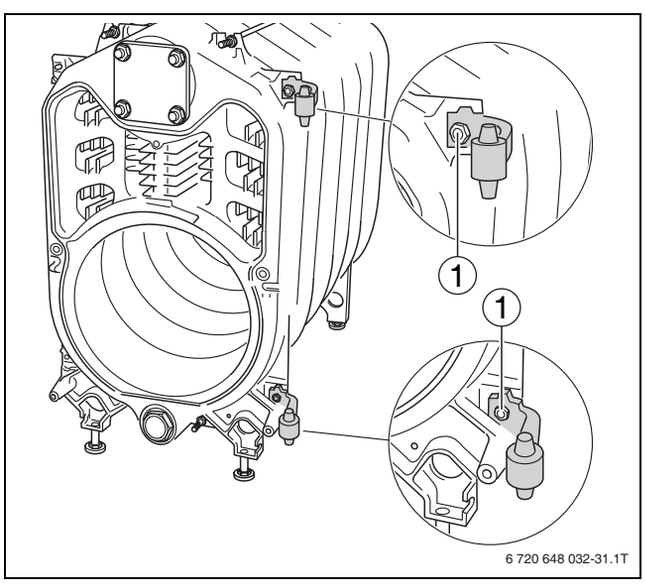

Fig. 31 Fit hinge pins

1 M12 x 35 hexagon bolt

- Secure both slotted hinge lobes with one M12 x 25 hexagon bolt each to the burner door.
- Hook the burner door with the hinge lobes onto the hinge pins.

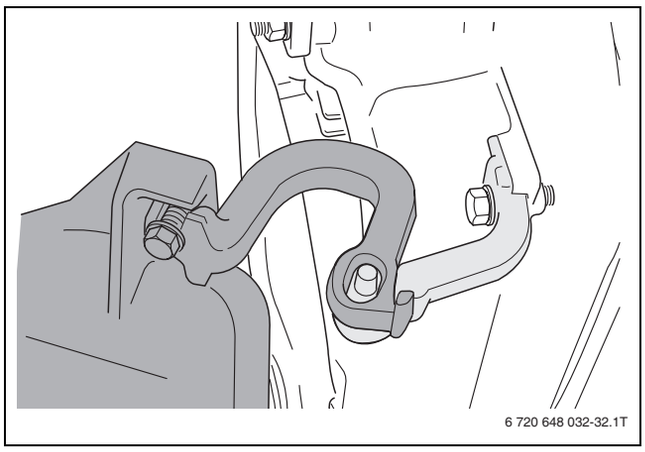

Fig. 32 Hooking on the burner door

- Close the boiler door.

5.4.4 Fitting the boiler jacket

Installation of the boiler back panel

- Screw spacer pins to the rear section.

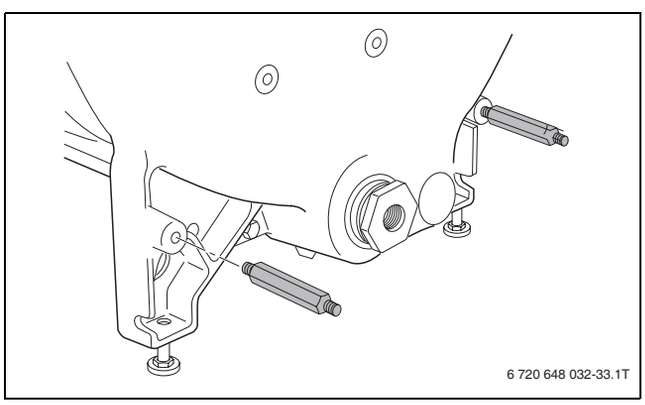

Fig. 33 Installing the spacer pin

- Secure the boiler back panel with nuts to the threaded and spacer pins.

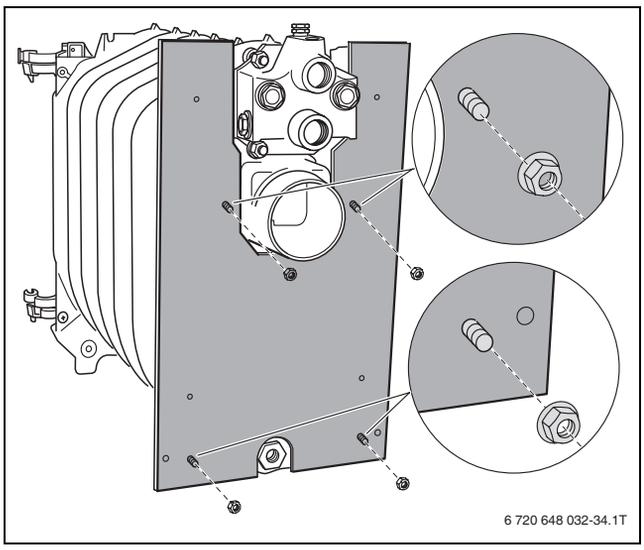

Fig. 34 Installing the boiler back panel

Installation of the top tie-bar

- Secure the top-tie bar with the nuts supplied to the anchor rod threads.

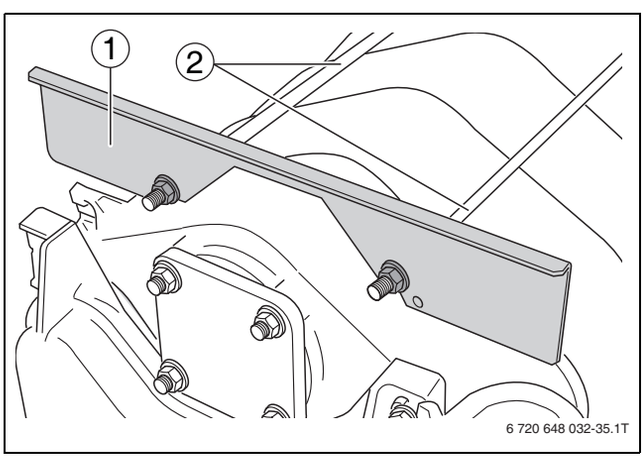

Fig. 35 Installing the top tie-bar

1 Top tie-bar
2 Anchor rods

Fitting the bottom tie-bar

- Screw the bottom cross bar with hexagon bolts to the front section.

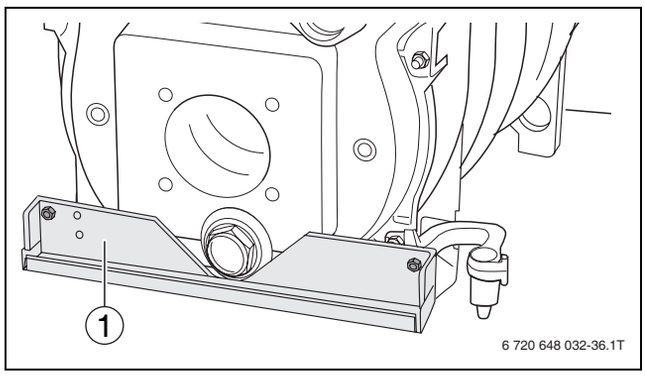

Fig. 36 Fitting the bottom cross bar

1 Bottom cross bar

Installing thermal insulation

- Position the thermal insulation over the boiler block.
- Push the thermal insulation below the boiler block in the direction of the arrow.
- Position the thermal insulation tabs in front of the top tie-bar and draw them together with a spring clip.

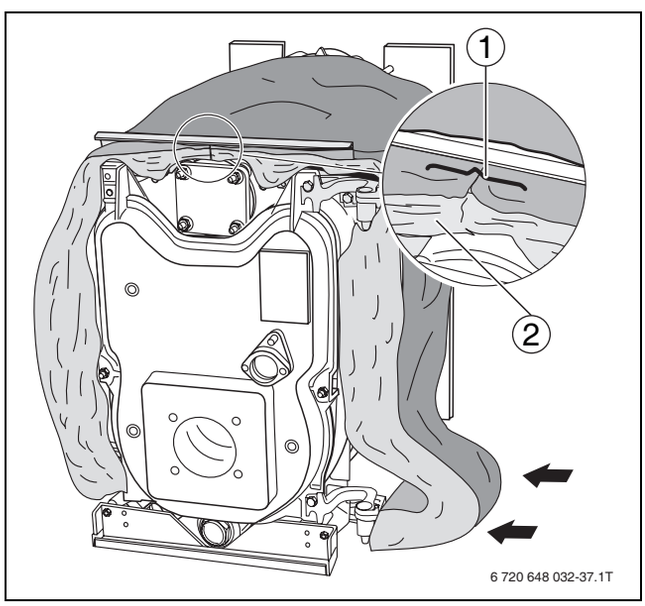

Fig. 37 Installing thermal insulation

1 Spring clip
2 Thermal insulation tabs

Fitting the side panels

The side panels are fitted identically on each side (r.h. side panel shown here).

- ▶ Push the snap nut onto the angled sheet steel of the side panel until it locks the hole provided.

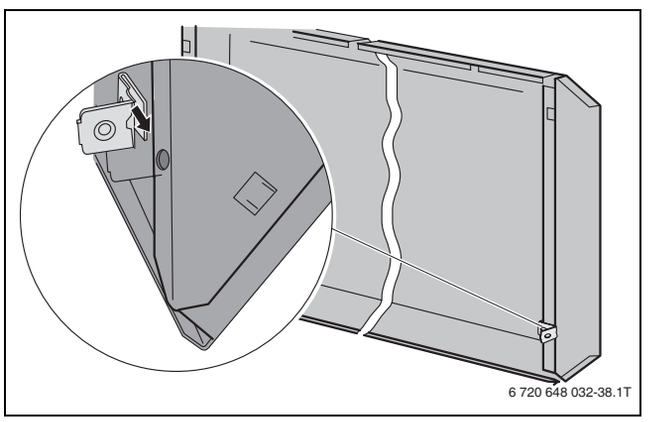

Fig. 38 Positioning snap nut

- ▶ Push the side panel into the angled part of the bottom cross bar.

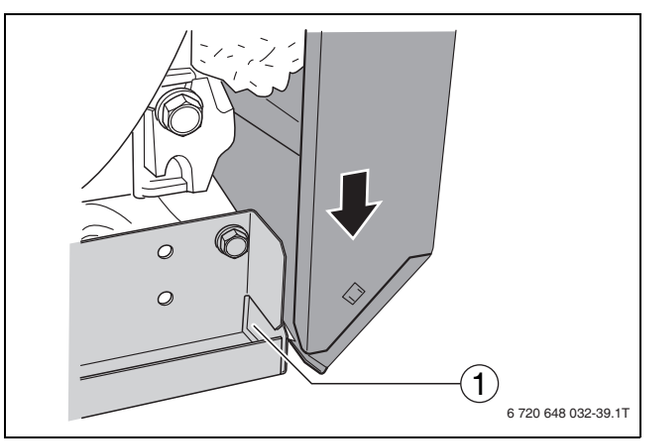

Fig. 39 Push in the bottom front corner of the side panel

1 Angled part of the bottom cross bar

- ▶ Slightly lift the side panel.
- ▶ Hook the side panel upper cutout into the upper tie-bar.
- ▶ Hook the rear part of the side panel to the extended hook.

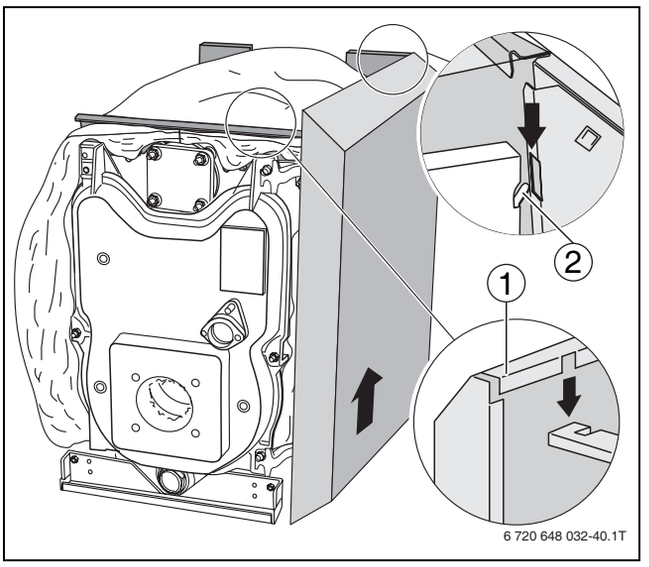

Fig. 40 Slot side panel into place

1 Top tie-bar
2 Extended hook

- ▶ Push against the lower end of the side panel and secure with the rear panel using the snap nut.

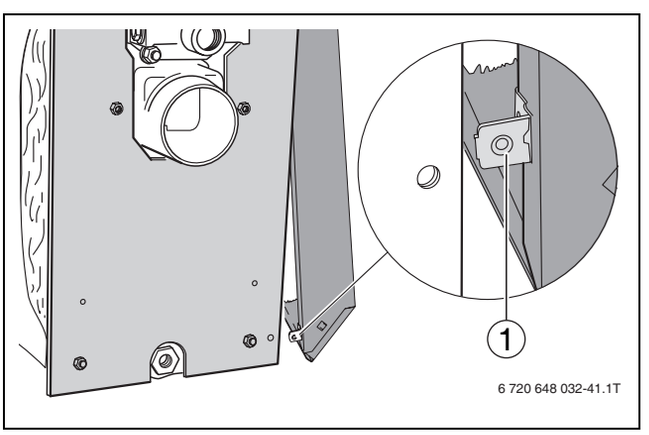

Fig. 41 Fasten the side panel to the rear panel with screws

1 Snap nut

Installing the top front boiler cover

Installation of the boiler cover
(→ Chapter 5.4.4, page 26).

- Hook the front boiler cover with its cutout into the upper tie-bar and push back.
- Secure the front boiler cover with two self-tapping screws to the side panels.

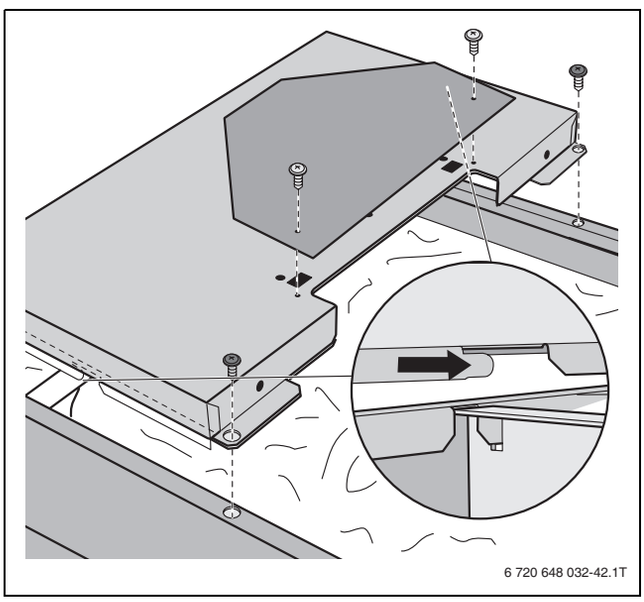

Fig. 42 Installing the front boiler cover

Fitting the cable entry

- Screw the cable entry to the hole in the boiler back panel.

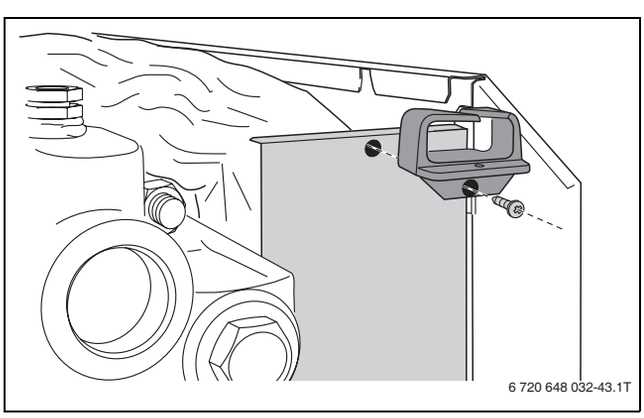

Fig. 43 Fitting the cable entry

5.5 Positioning and leveling the boiler

- Positioning the boiler in its final location.
- Level the boiler horizontally by turning the adjustable feet and using a spirit level.

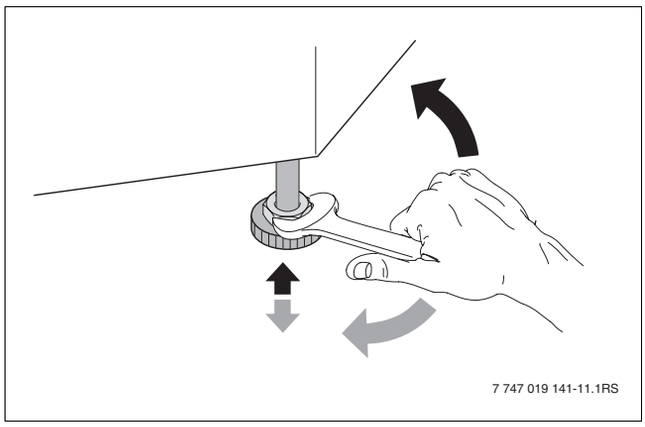

Fig. 44 Leveling the boiler horizontally

6 Installing the boiler

This chapter details how to install your boiler correctly. The individual steps involved are:

- Connecting the flue
- Connecting the water pipes
- Making the electrical connections
- Fitting the burner
- Connecting the fuel supply

6.1 Flue pipe installation

6.1.1 Chimney venting

Connect boiler to vertical chimney with a 6" (150 mm) vent pipe. Use only venting systems that comply with local codes and regulations.

For oil boilers:

If local codes are not existent, refer the the following regulations:

- NFPA 31, Installation of Oil-Burning Equipment,
- NFPA 211, Standard for Chimneys, Fire Places and Solid Fuel Burning Appliances,
- In Canada refer to CSA B139, Installation Code for Oil-Burning Equipment,
- NFPA 211 requires chimney to be lined before connecting boiler.

For gas boilers:

If local codes are not existent, refer the the following regulations:

- ANSI Z223.1/NFPA-54, National Fuel Gas Code.
- In Canada refer to CAN/CSA B149, Installation Code for Gas Burning Appliances and Equipment.

Inspecting and cleaning existing flue

Before installing the new boiler, check and clean the old flue system.

- ▶ Remove blockages and dirt from the chimney.
- ▶ Clean chimney.
- ▶ Repair or replace faulty sections.
- ▶ If necessary, repair chimney with mortar and joints.

Down drafts

To prevent down drafts extend chimney at least 3 feet (0,9 m) above the roof opening and at least 2 feet (0,6 m) above any part of the roof within a radius of 10 feet (3 m).

Minimum clearances to combustible material

Flue pipe	Type	Minimum clearance
Double-wall	L	6" (150 mm)
Single-wall	L	18" (460 mm)

Table 15 Minimum clearances to combustible objects for flue systems

Minimum size of chimney

The minimum recommended chimney size is 8" x 8" (200 mm x 200 mm)
(6 ¾ " x 6 ¾ " (170 mm x 170 mm) inside liner) or 6" (150 mm) diameter with a minimum height of 20 feet (6 m). Use a 6" (150 mm) flue pipe for connection to an existing chimney.

Installing the flue pipe

DANGER: Risk of death from escaping flue gases.

If the resistance to flue gas flow is too great and/or the flue pipe diameter is smaller than the recommended size and/or the flue pipe is too short:

- ▶ Seal all vent pipe joints.
- ▶ Install a CO alarm. Positive pressure combustion ensures that the flue gas can exit the flue system.

- ▶ Insert flue pipe 6" (150 mm) onto the breach and secure with 2 screws.

Avoid long horizontal flue pipe runs and keep the number of elbows to a minimum.

- ▶ Install flue connections between boiler and chimney to slope up at least ¼ " (6 mm) per foot (0,3 m) to the chimney.
- ▶ Connect the flue pipe to the chimney above the bottom of the chimney to prevent blockages.
- ▶ Install cleaning and service hatches.

After starting the burner, set breeching draft to -0.01 to -0.02 inches WC (2.5 Pa - 5 Pa) using a draft gauge. The overfire pressure can be positive. If necessary, install a barometric damper in the flue system to maintain the underpressure in the system or to meet code requirements. Always install the draft controller in vertical position. Use a draft gauge when making adjustments.

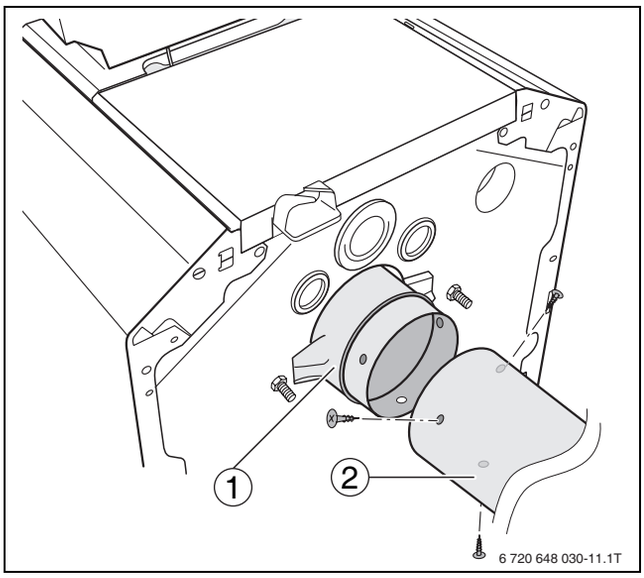

Fig. 45 Installing the flue pipe

1 Boiler flue outlet
2 Flue pipe

6.2 Fitting the water connections

CAUTION: Risk of system damage from leaking connections.

- Support the pipes to the boiler to prevent them from being under stress.

6.2.1 Fitting the B-kit

The safety relief valve and the pressure/temperature gauge are mounted on the supply manifold (included in B-Kit) on the VK boiler supply connection as follows:

- Measure length of thread on R1¼ " x 1¼ " NPT double nipple.
- Seal supply manifold to connection VK with the long side to the boiler.

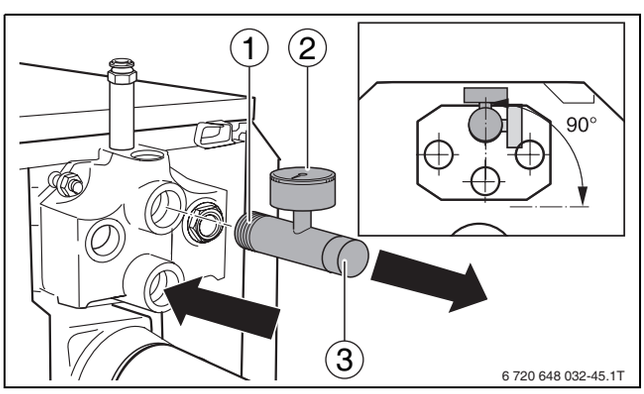

Fig. 46 Installing B-Kit

1 Thread nipple
2 Pressure/temperature gauge
3 Supply manifold

- Seal conversion nipple on boiler inlet VK.
- Seal pressure/temperature gauge to conversion nipple.

Do not fit the safety valve until the leak test (→ Chapter 6.3, page 32) has been completed.
The relief valve must be installed in a vertical position.

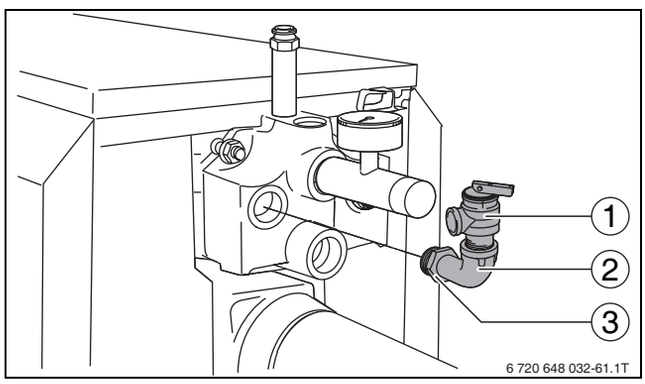

Fig. 47 Installing B-Kit

1 Pressure relief valve
2 90°-Elbow 1¼ " NPT
3 Conversion nippple 1"× ¾ "

6.2.2 Installation of boiler drain (included in B-Kit)

- Install the boiler fill and drain valve with seal to connector EL.
- Seal boiler drain to connection EL.

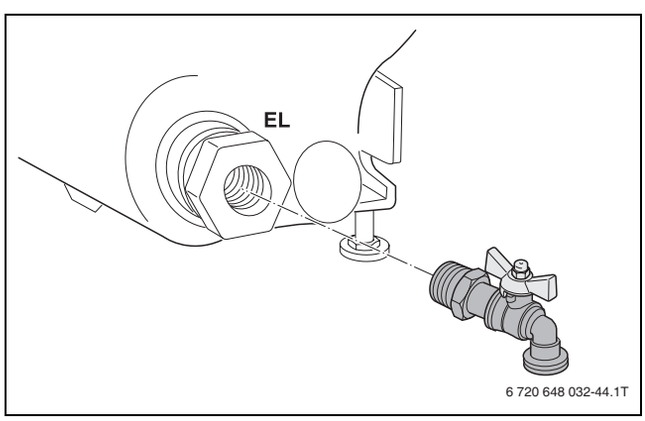

Fig. 48 Installation of boiler drain

6.2.3 Installing system components

See the installation diagram for installation of the heating system components.

For more installation examples refer to → Chapter 11, page 48.

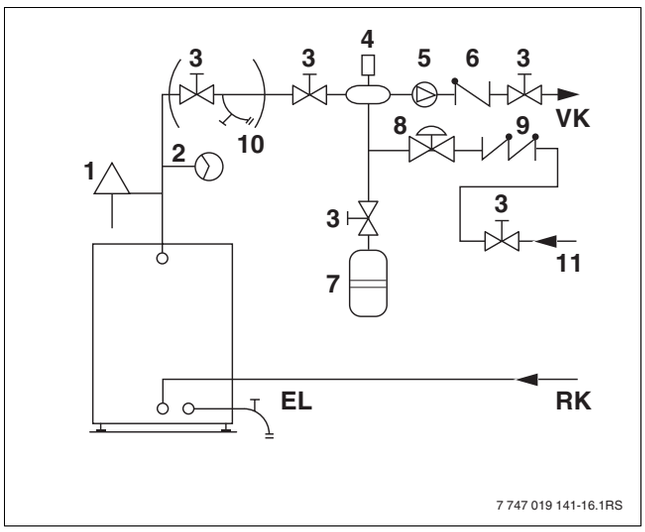

Fig. 49 Installationsschema

1 Pressure relief valve
2 Pressure/temperature gauge
3 Ball or stop valve
4 Air eliminator (in main supply)
5 System pump
6 Flow check valve
7 Expansion tank
8 Automatic feed valve
9 Flow check valve
10 Purge station
11 Water feed
VK Boiler supply
EL Drain
RK Return

6.3 Filling the heating system and checking for leaks

When the boiler is delivered assembled it is checked for leaks at the factory. Before putting the heating system into operation, it must be checked to ensure that no leaks will occur during operation. When supplied disassembled (→ Chapter 5.2, page 24).

CAUTION: Risk of system damage from excess pressure when testing for leaks.

Pressure, control and safety equipment may be damaged by excessive pressure.

- When you carry out a leakage test, make sure that no pressure, control or safety equipment that cannot be isolated from the boiler water chamber is fitted.

CAUTION: Risk of damage to system due to temperature stresses.

If you fill the heating system when it is hot, the resulting temperature stresses can cause stress cracks. The boiler will then leak.

- Only fill the heating system when cold (the flow temperature should be no more than 100 °F (37 °C).
- Pay attention to the water quality as specified in the operator's log, and record the volume and quality of the water used to fill the system.

Carry out the leak test at 1.5 times the standard operating pressure and in accordance with the codes.

Maximum operating pressure	Maximum on-site testing pressure
30 psi (2 bar)(with safety valve supplied)	45 psi (1 bar)
58 psi (4 bar) (with 50 psi (3,5 bar) relief valve)	75 psi (5,1 bar)

Table 16 Maximum testing pressure

- Seal pressure relief valve connection (→ Fig. 47 "Installing B-Kit", page 31) and all other open connection with blind plugs.
- Isolate the expansion tank from the system by closing the valve.

- Open the mixing and shut-off valves on the heating water (primary) side.
- Connect the hose to the water tap. Attach a hose filled with water onto the hose connection of the boiler fill and drain valve, fasten with a hose clip and open the valve.
- Slowly fill the boiler with tap water.

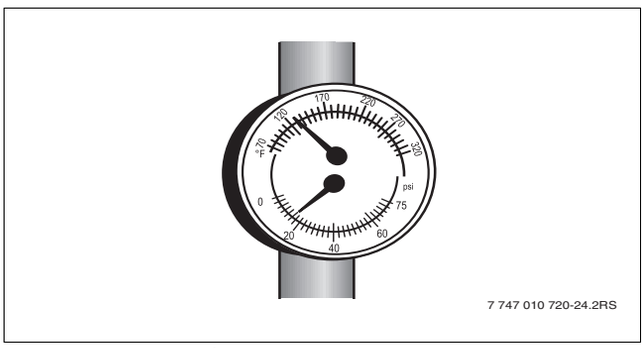

Fig. 50 Pressure/temperature gauge

CAUTION: Health risk from contaminated domestic water.
- Always observe the regulations and standards applicable in your jurisdiction for the prevention of contamination of drinking water (e.g. by water from heating systems).

- Open the cap of the automatic air vent by one full turn to allow air to escape.
- Slowly fill the heating system. Observe the pressure gauge whilst filling.
- Close the water tap and the boiler fill and drain valve once the required operating pressure has been reached.
- Check the connections and pipework for leaks.
- Bleed the system via the radiator bleed valves if applicable.
- Top with water if the pressure drops as a result of bleeding the system.
- Installing pressure relief valve (→ Fig. 47 "Installing B-Kit", page 31).
- Remove the hose from the boiler fill and drain valve.

6.4 Mounting the burner

Only burners that comply with the boiler specification can be used with this boiler. (→ Chapter 2.7, page 9).

CAUTION: Risk of system damage from use of incorrect fuel.
- Only use burners which meet the technical boiler requirements.

- Screw studs included with the B-Kit to the burner door.
- Fit the burner to the hole circle of the burner door.

Approved burners with accessories (such as aquastat and circulator) are also available as a package from Bosch.

- Install burner with the correct nozzle and settings (air, pump pressure, turbulator settings, flange position).
- Place the seal on the studs and secure the burner with the included nuts.

For details of the correct burner settings
→ flue system documentation and
→ burner documentation.

- Follow the manufacturer's direction for installation, fine adjustment and regular maintenance procedures.
- Wire up the burner (→ documentation for burner).

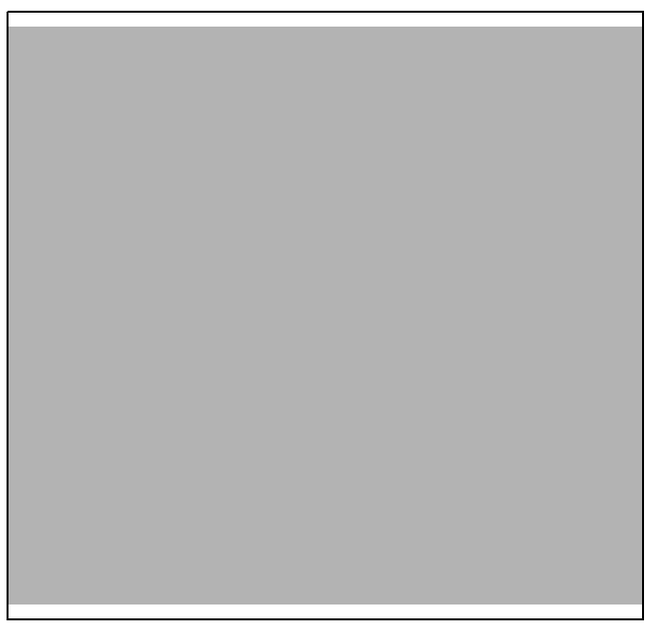

Fig. 51 Burner door mounting holes

6.5 Connecting the fuel supply

Make the fuel connection in accordance with all applicable local and national codes and regulations. We recommend fitting a fuel filter and de-aerator for oil boilers.

- ▶ Visually inspect the fuel pipe and clean or replace, if necessary.
- ▶ Install a shut-off valve into the fuel supply pipe.
- ▶ Connect the fuel pipe free of stress to the boiler.
- ▶ Check the fuel line for leaks.

6.6 Installing aquastat

An aquastat controls the boiler supply temperature.

- ▶ Install aquastats in the sensor well as specified by the installation manual.

For operating the boiler with aquastat → Chapter 7, page 36.

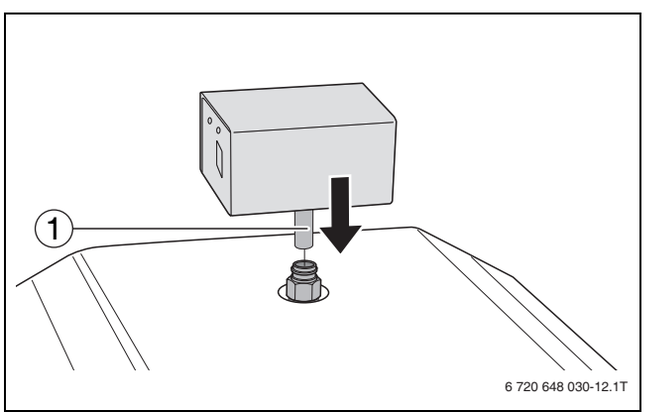

Fig. 52 Installling aquastat

1 Immersion sleeve

6.7 Blocked vent switch (required in Canada)

For Canadian installations fit a blocked vent switch per the vent switch manufacturer's instructions and as close as possible to the boiler breach.

See wiring diagrams.

6.8 Electrical connections

DANGER: Risk of death from electric shock.

- ▶ Electrical work may only be carried out by qualified technicians. Before opening any electrical equipment, isolate it from the power supply by turning off the emergency shut-off switch or disengaging the heating system circuit breaker, and prevent from accidental reactivation. Follow the installation instructions.

- ▶ Remove rear boiler jacket.
  - – Unscrew the fixing screws.
- ▶ Remove Back boiler cover. Wiring from the control/ aquastat to the burner is passed through the hole in the front boiler top panel.

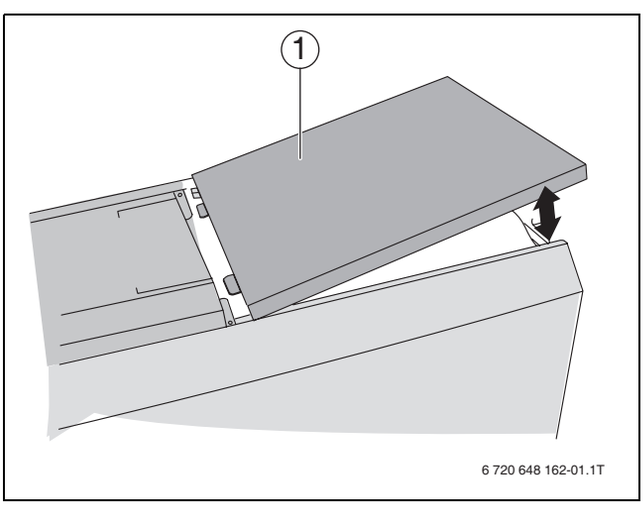

Fig. 53 Removing/Installing the back boiler cover

1 Back boiler cover

For details of the correct writing see aquastats/control documentation.

6.9 Jacket panel installation

- Fit the rear boiler cover.
- Secure by reinstalling cover screws.

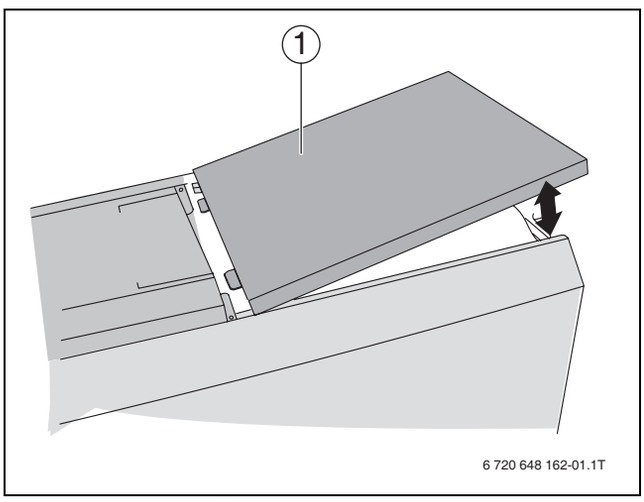

Fig. 54 Removing/Installing the back boiler cover

1 Back boiler cover

7 Commissioning the heating system

This chapter describes the initial start-up procedure regardless of the installed control device.

- Complete the start-up protocol during this process (→ Chapter 7.9, page 39).

Further information on boiler room layout and clearances, combustion air requirements and venting systems and boiler operational requirements can be found in → Chapter 2.8, page 10.

CAUTION: Risk of boiler damage from excessive dust and airborne particle levels.
- Do not operate the boiler when there is a lot of dust in the boiler room, e.g. due to construction work.
- Install an air filter if the combustion air supply is very dusty (e.g. due to dirt roads and paths or dust-generating working environments such as quarries, mines etc.) or contains airborne seeds from composite plants.

7.1 Bringing the system up to operating pressure

Bring the system up to the normal operating pressure before commissioning.

CAUTION: Risk of damage to system due to material stresses caused by temperature differentials.
- Only fill the heating system when cold (the flow temperature should be no more than 100 °F (37 °C)).

- Top up the heating water or drain via the boiler drain valve until the required operating pressure has been reached: minimum 15 psi (1 bar), maximum 30 psi (2 bar) pressure.
- Bleed air from the heating system while filling.

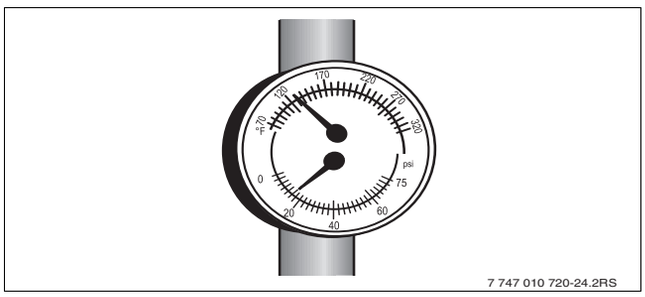

Fig. 55 Pressure/temperature gauge for showing operating pressure and supply temperature

7.2 Checking the safety valve

- Make sure that no persons are in the discharge area of the pressure relief valve.
- Raise the lever on the pressure relief valve.

The pressure relief valve must open and release pressure. If the pressure relief valve does not discharge, it must be replaced, because system components can be damaged by excessive pressure.

7.3 Preparing the heating system for operation

- Open the fuel supply at the main shut-off valve.
- Switch on the heating system emergency shut-off switch and/or the appropriate circuit-breaker.

7.4 Starting up the burner

For further start-up steps, follow the burner start-up sequence.To do so, it is essential that you consult the burner and the control documentation.

7.5 Notes on commissioning the burner

Allow burner to operate for 15 to 20 minutes before performing a combustion test. Earlier combustion tests can lead to incorrect readings as a result of burning off the sealing rope. We recommend rechecking the burner after a few weeks of operation.

Incorrect burner adjustment can cause contamination of the boiler (e.g. soot), leading to low efficiency, high emissions, and a greater risk of service calls.

- ▶ Always check combustion with the following instruments.
- ▶ Never adjust burner visually.

Required instruments:

- CO2 measuring equipment
- Draft measuring equipment
- Oil pressure gauge/Gas pressure meter
- Stack thermometer
- Smoke tester

▶ Check the combustion chamber pressure at the test port.

▶ Check the breeching draft at a test port drilled in the vent connector (chimney vent models only).

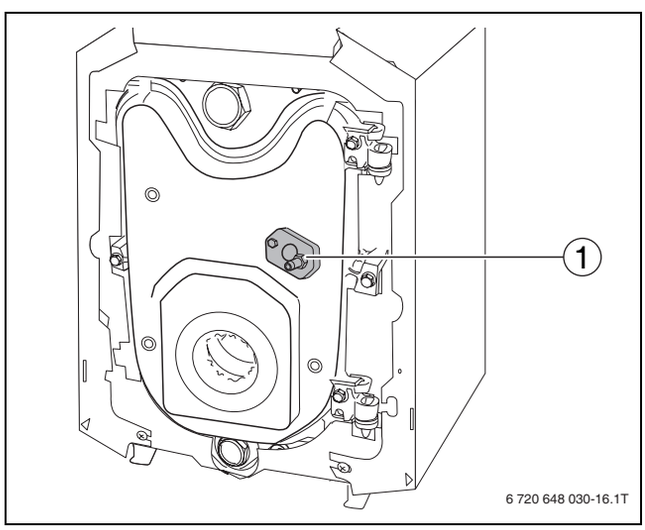

Fig. 56 Pressure test port on burner door

1 Pressure test port

7.6 Raising flue gas temperature

For the set flue gas temperature for the boiler see the technical data (→ Chapter 2.7, page 9).

You may raise the flue gas temperature if you discover during tests that the flue gas temperature is too low for the type of chimney used (risk of condensation) by one or several of the following measures:

CAUTION: Risk of explosion due to escaping gas.

- ▶ Shut off the main shut-off valve if the gas line to the gas burner must be disconnected to open the burner door. Route the remaining escaping gas outdoors.

CAUTION: Risk of burning by touching hot boiler parts.

- ▶ Wear appropriate protective gloves or use pliers.

▶ Removing flue gas baffle plates

-or-

▶ Removing the flue gas check plate.

▶ Shut down the heating system (→ Chapter 8.1, page 40).

7.6.1 Removing flue gas baffle plates

You can remove the baffle plates in pairs to raise the flue gas temperature.

▶ Open burner door by removing the two hexagon bolts at the sides.

▶ Remove the baffle plates towards the front.

▶ Close burner door with the two hexagon bolts (approx. 90 inch-lbs (10 Nm)) Tighten the hexagon bolts evenly to properly seal the burner door.

▶ Re-check the flue gas temperature.

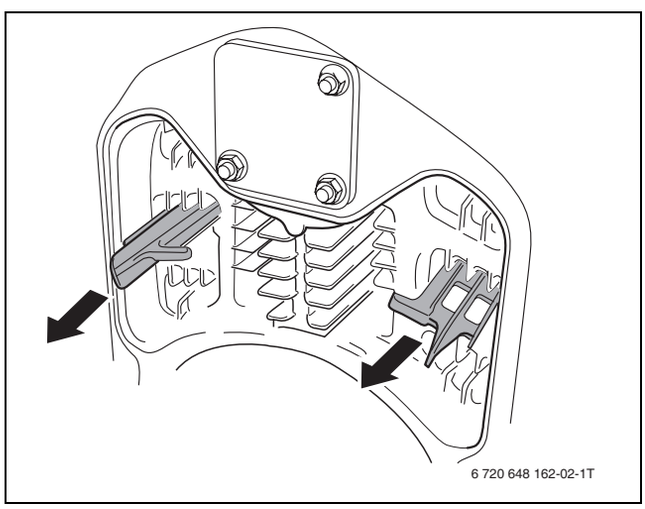

Fig. 57 Removing hot gas baffle plates (example: 2. hot gas flue)

7.6.2 Removing the blocking plate

You can remove the blocking plate to further raise the flue gas temperature if the flue gas temperature is still too low after removing of the baffles.

- ▶ Open burner door by removing the two hexagon bolts at the sides.
- ▶ Remove blocking plate by loosening bolt.
- ▶ Re-check the flue gas temperature.

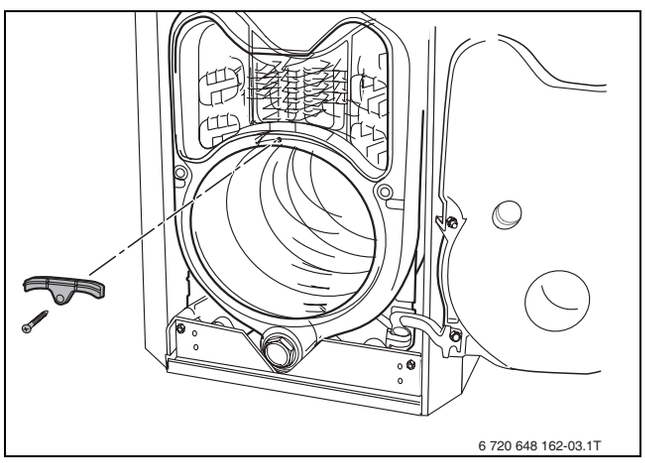

Fig. 58 Removing the blocking plate

7.7 Manual reset high limit (STB)

The manual reset high limit interrupts the power supply if the maximum permissible flow temperature is exceeded.

To enable a boiler reset and re-starting, the fault must be removed and the system temperature must have fallen below the limit.

- ▶ Check the function of the manual reset high limit (→ controls maintenance instructions).

7.8 Installing jacket panels

- ▶ Attach burner door jacket in the slots of the front boiler cover.
- ▶ Slightly lift the burner door jacket until it hooks into the bottom cross bar.

DANGER: Risk of fatal injury from electric shock.

- ▶ Only operate the boiler with the burner hood/door panel fitted.

CAUTION: Risk of system damage from use of incorrect fuel.

- ▶ Only use burners which meet the technical requirements of the Bosch Uni 5000F (→ Chapter 2.7, page 9).

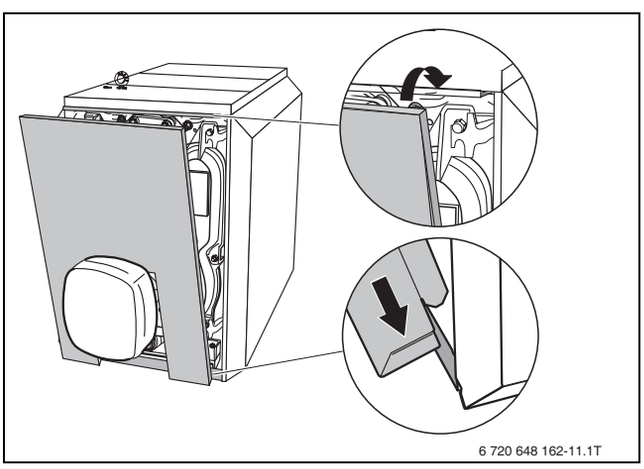

Fig. 59 Installing the burner door jacket

7.9 Commissioning log

▶ Initial and date the commissioning steps carried out.

	Commissioning operations	Page	Readings taken	Comments
1.	Fill heating system and check for leaks • Heating system pressure	32	☐ _____ psi (bar)	
2.	Bringing the system up to operating pressure ▶ bleeding heating system ▶ Testing relief valve ▶ adjust the expansion tank pressure (→ see the expansion tank manufacturer's documentation)	36	☐ _____ psi (bar)	
3.	Checking combustion air supply and flue system		☐	
4.	Switching on the controls and burner (→ controls' documentation)	36	☐	
5.	Checking flue gas temperature and raising if required	37	☐ _____ °F (°C)	
6.	Checking the manual reset high limit (STB)	38	☐	
7.	Adjusting the controls settings to suit the customer's requirements (→ controls' documentation)		☐	
8.	Informing the end user and handing over technical		☐	
	Confirmation of properly completed commissioning		Company stamp/signature/date	

Table 17

Inform the customer about the correct fuel and correct operating pressure. Enter the details in the table (→ boiler operating instructions).

8 Shutting down the heating system

CAUTION: Risk of system damage from freezing.

If the heating system has been switched off, it may freeze up in cold weather conditions.

- Leave the heating system switched on as long as possible.
- Protect a disabled heating system from freezing by draining the heating system and hot water pipes at the lowest point.

8.1 Shutting down normally

- When using ext. aquastat/control: Shut off main heating system by turning off the emergency shut-off switch (position "OFF"). This switches off the boiler with all its components.
- Further shut-down procedure → refer to aquastat/ control documentation.

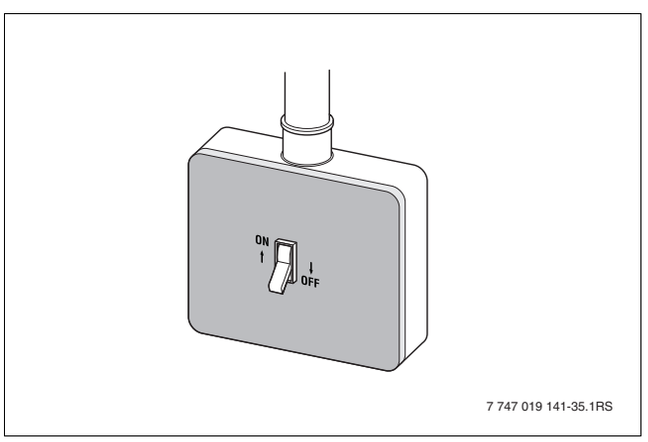

Fig. 60 Heating system emergency shut-off switch

- Shut off fuel supply by closing main valve.

8.2 Shutting down the heating system in an emergency

Use the heating system emergency shut-off switch located outside the boiler room or the heating system circuit-breaker for emergency shutdown.

What to do in an emergency

Explain to the customer what to do in an emergency, e.g. a fire.

- Never put yourself at risk of fatal injury. Your own safety must always take the highest priority.
- Shut off fuel supply by closing main valve.
- Disconnect the heating system from the electrical power supply by means of the emergency shutoff switch or the heating system circuit-breaker.

9 Heating system servicing

9.1 Why is regular maintenance important?

Heating systems should be regularly maintained for the following reasons:

- to achieve a high level of efficiency and to operate the system economically (low fuel consumption),
- to achieve a high level of operational reliability,
- to maintain the cleanest possible combustion,
- to ensure reliable operation and long service life.

Servicing work may only be carried out by a qualified service technician. If parts are replaced, only Bosch approved components may be used. A service must be carried out once a year. The results of the services must be recorded in the servicing and maintenance log.

Spare parts can be ordered from Bosch using the parts list.

9.2 Preparing the boiler for servicing

DANGER: Risk of death from electric shock.

- Before working on the boiler and prior to opening control panel:
  shut down the power supply by turning off the emergency shut-off switch or disengaging the heating system circuit breaker, and prevent from accidental reactivation.

CAUTION: Danger of Life Risk from explosion of volatile gases.

- Work on gas components must be carried out by qualified and authorized personnel only.

- Shut down the heating system. (→ Chapter 8.1, page 40)
- Remove the burner door panel or the burner hood from the boiler.
- Disconnect electrical supply to burner.

9.3 Cleaning the boiler

The boiler can be cleaned with brushes and/or by a wet method. Cleaning equipment is available as accessory.

CAUTION: Risk of burning by touching hot boiler parts.

- Wear appropriate protective personal safety equipment.

- Open burner door by removing the two hexagon bolts on the sides.

9.3.1 Cleaning the boiler with brushes

- Note the position of the flue gas baffle plates to enable their correct re-installation later.
- Remove the flue gas baffle plates from the flue gas flues.
- Clean the flue gas baffle plates with one of the two cleaning brushes.

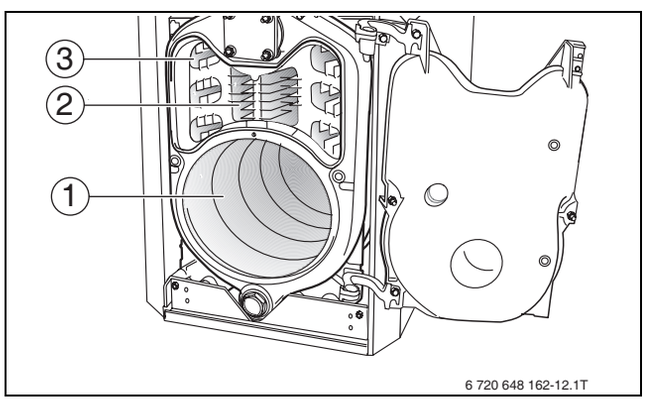

Fig. 61 Open the burner door

1 Combustion chamber
2 2. flue gas pass
3 1. flue gas pass

- Clean the flue passages by turning the round cleaning brush.

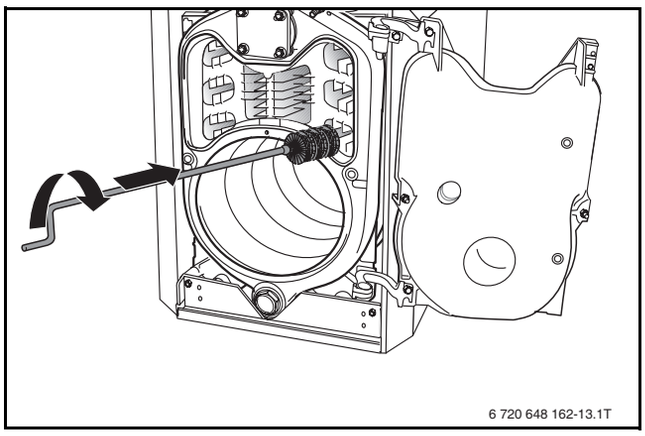

Fig. 62 Brushing out the flue gas passages

- Clean the combustion chamber with a flat brush. Remove the debris from the combustion chamber, the flue passages and the flue connection.
- Install the flue baffle plates in their original position.
- Check sealing rope on burner door. Replace damaged or hardened gasket cord.

You can obtain suitable sealing rope from your local Bosch sales office.

- Close burner door with the two hexagon bolts (approx. 90 inch-lbs (10 Nm)). Tighten the hexagon bolts evenly to properly seal the burner door.

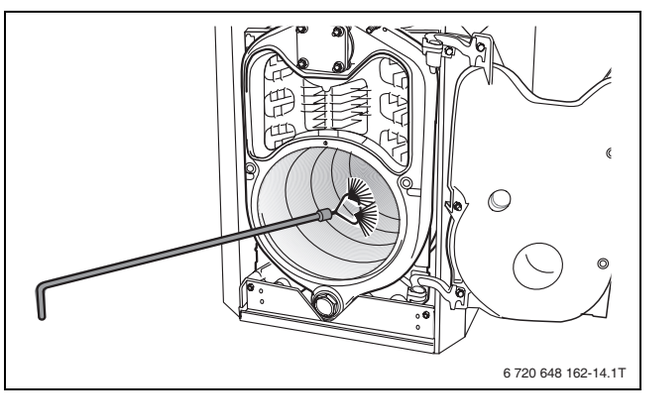

Fig. 63 Brushing out the combustion chamber

9.3.2 Wet cleaning (chemical cleaning)

For wet cleaning use a cleaning agent appropriate for the degree of soiling (soot or scale). Proceed with the wet cleaning in the same order as described for cleaning with brushes (→ Chapter 9.3.1, page 41).

Follow the instructions for the cleaning product. You may need to proceed differently from the method described here in some circumstances.

- Cover the control panel with plastic to prevent spray from entering the control panel.
- Spray cleaning agent evenly into the flue gas passes.
- Close burner door and start up the heating system.
- Heat the boiler to a temperature of at least 160 °F (70 °C).
- Shut down the heating system.
- Brush out the hot gas flues.

9.4 Checking heating system operating pressure

The system pressure for closed systems must be 12 – 30 psi (1.0 – 2.1 bar).

- Check system pressure.
- If the pressure gauge shows less than 12 psi (1 bar), the pressure is too low. Top up the system with water.

CAUTION: Risk of system damage due to frequent topping up.

If you have to top up the heating water frequently, the heating system may suffer damage from corrosion or scaling, depending on the water quality.

- Ensure that your heating system is bled properly.
- Check the heating system for leaks and proper operation of the expansion vessel.

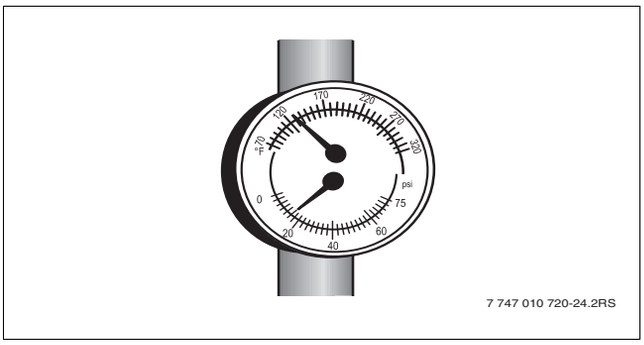

Fig. 64 Pressure/temperature gauge for showing operating pressure and feed temperature



CAUTION: Risk of damage to system due to material stresses caused by temperature differentials.

- Only fill the system when cold (the flow temperature at the temperature/ pressure gauge should be no more than 100 °F (37 °C)).

- Add water through the feed valve.
- Bleed the heating system.
- Check the operating pressure again.

9.5 Testing relief valve

The functioning of the pressure relief valve must be checked at regular intervals (1-3 years as specified by local codes).

- Make sure that no persons are in the discharge area of the pressure relief valve.
- Raise the lever on the pressure relief valve.

The pressure relief valve must open and release pressure. If the pressure relief valve does not discharge, it must be replaced, because system components may be damaged by excessive pressure.

9.6 Servicing and maintenance logs

▶ Initial and date the servicing operations completed.

The inspection and servicing logs can also be used as copy masters.

	Service work	Page	Date:_____	Date:_____	Date:_____
1.	Check general condition of heating system		☐	☐	☐
2.	Visual inspection and function check of the heating system		☐	☐	☐
3.	Checking fuel and water-carrying components of the system for: • leaks during operation • leak test • visible signs of corrosion • signs of ageing		☐	☐	☐
4.	Check the combustion chamber and the heating surface for contamination; shut down the system for this step	40	☐	☐	☐
5.	Checking the burner (→ burner documentation)		☐	☐	☐
6.	Check the combustion air supply and flue gas routing for function and safety		☐	☐	☐
7.	Check the operating pressure, relief valve and expansion tank inlet pressure	42	☐	☐	☐
8.	Checking function of DHW tank and sacrificial anode (→ DHW tank documentation)		☐	☐	☐
9.	Checking controls settings (→ controls' documentation)		☐	☐	☐
10.	Record the final checks of the inspection work, incl. measurements and test results		☐	☐	☐
	Confirmation of properly completed servicing		Company stamp/ signature	Company stamp/ signature	Company stamp/ signature

Table 18

	Date:_____	Date:_____	Date:_____	Date:_____	Date:_____	Date:_____	Date:_____
1.	☐	☐	☐	☐	☐	☐	☐
2.	☐	☐	☐	☐	☐	☐	☐
3.	☐	☐	☐	☐	☐	☐	☐
4.	☐	☐	☐	☐	☐	☐	☐
5.	☐	☐	☐	☐	☐	☐	☐
6.	☐	☐	☐	☐	☐	☐	☐
7.	☐	☐	☐	☐	☐	☐	☐
8.	☐	☐	☐	☐	☐	☐	☐
9.	☐	☐	☐	☐	☐	☐	☐
10.	☐	☐	☐	☐	☐	☐	☐
	Company stamp/ signature	Company stamp/ signature	Company stamp/ signature	Company stamp/ signature	Company stamp/ signature	Company stamp/ signature	Company stamp/ signature

Table 19

If any condition requiring maintenance work is identified in the course of servicing, that work must be carried out as necessary to ensure safe and proper operation.

	On-demand maintenance procedures	Page	Date:_____	Date:_____	Date:_____
1.	Shutting down the heating system	40	☐	☐	☐
2.	Removing and cleaning the flue baffles	41	☐	☐	☐
3.	Cleaning the (heating surfaces) and combustion chamber and afterwards re-install the flue baffle plates in their original position	41	☐	☐	☐
4.	Checking seals/cord gaskets on burner door and burner and replacing as necessary	41	☐	☐	☐
5.	Commissioning the heating system	36	☐	☐	☐
6.	Final check of the servicing work		☐	☐	☐
7.	Checking safe and proper operation		☐	☐	☐
	Confirmation of properly completed servicing		Company stamp/ signature	Company stamp/ signature	Company stamp/ signature

Table 20

	Date:_____	Date:_____	Date:_____	Date:_____	Date:_____	Date:_____	Date:_____
1.	☐	☐	☐	☐	☐	☐	☐
2.	☐	☐	☐	☐	☐	☐	☐
3.	☐	☐	☐	☐	☐	☐	☐
4.	☐	☐	☐	☐	☐	☐	☐
5.	☐	☐	☐	☐	☐	☐	☐
6.	☐	☐	☐	☐	☐	☐	☐
7.	☐	☐	☐	☐	☐	☐	☐
	Company stamp/ signature	Company stamp/ signature	Company stamp/ signature	Company stamp/ signature	Company stamp/ signature	Company stamp/ signature	Company stamp/ signature

Table 21

10 Troubleshooting

Two type of fault are distinguished:

- Burner faults and
- Control and heating system faults.

If there is a burner fault the fault indicator lamp on the burner comes on (→ burner documentation). Such faults can generally be reset by pressing the reset button on the burner. Controls and heating system faults are indicated on the controls display if it has one. For further information see → controls' documentation.

Correcting burner faults

CAUTION: Risk of system damage due to too many resets

Too many resets can damage the burner's ignition transformer.

- ▶ Do not press the reset button more than three times in a row.
- ▶ If the fault does not reset after the third attempt, try to localize and rectify the fault with the help of the burner documentation.
- ▶ Notify a service engineer if necessary.

- ▶ Remove the burner hood if the boiler is equipped with an integral burner.
- ▶ Press reset button on burner.

CAUTION: Risk of system damage from freezing.

The heating system can freeze up in cold weather if it has been disabled by a fault shutdown.

- ▶ Rectify the fault immediately and restart the heating system.
- ▶ If this is not possible, protect your heating system from freezing by draining the heating system and hot water pipes at the lowest point.

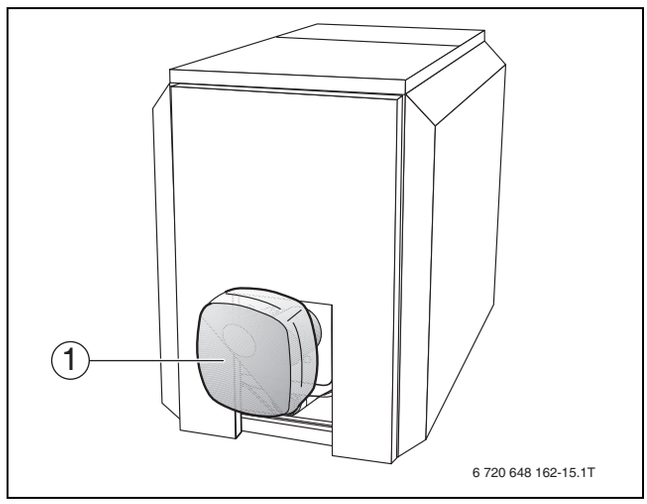

Fig. 65 Resetting the burner

1 Burner

11 Installation examples

Key to abbreviations

KR	Check valve	SH	Mixing valve
MAG	Expansion tank	SR	Adjustment for raising return temperature
PH	System pump	SV	Air scoop
PW	Hot water pump	THV	Zone valve
		WH	Pressure bypass loop

Table 22

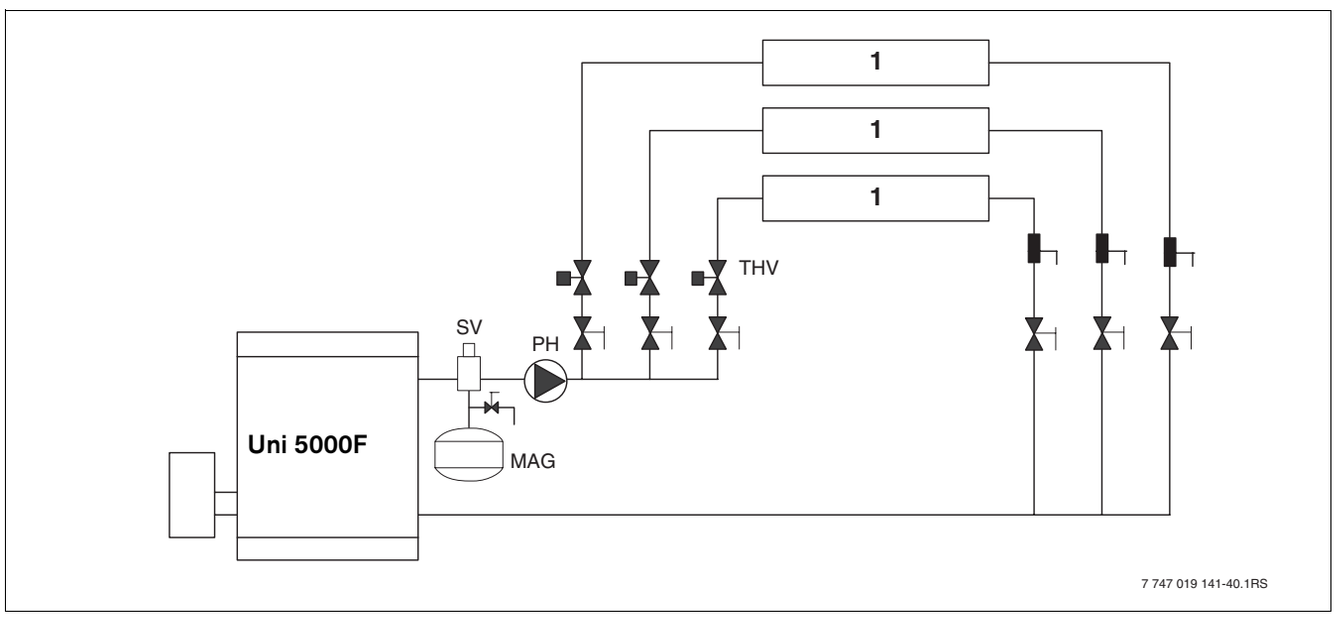

Fig. 66 Multiple circuits with circuit valves

1 Baseboard

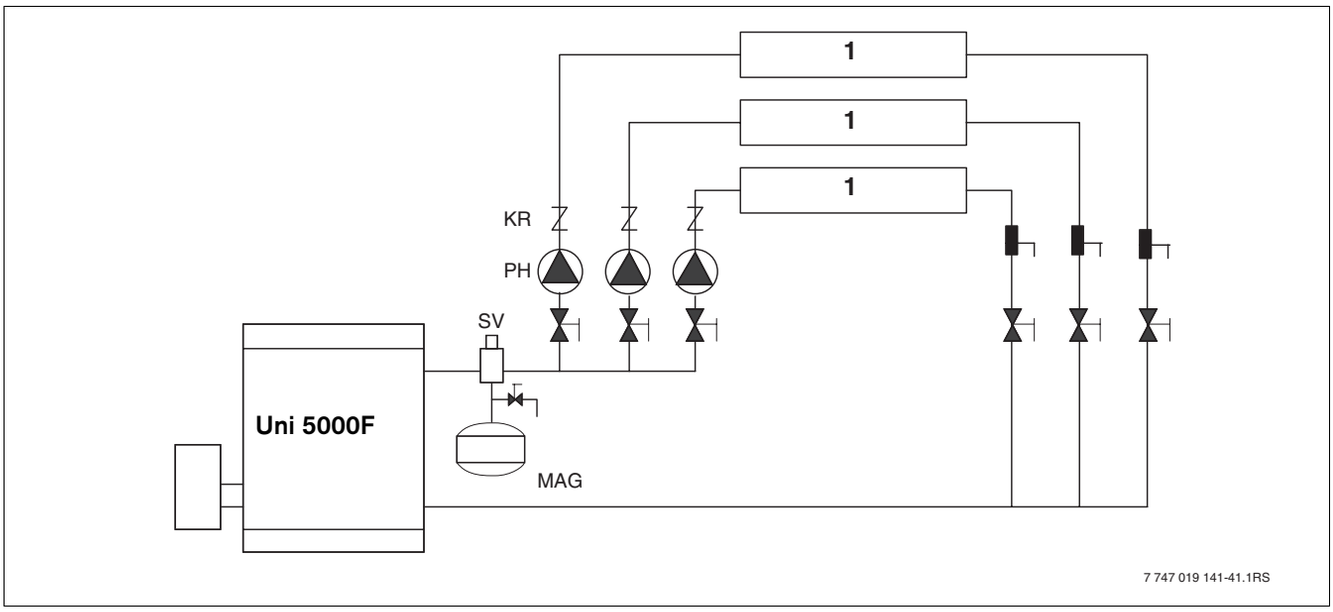

Fig. 67 Multiple circuits with circuit valves

1 Baseboard

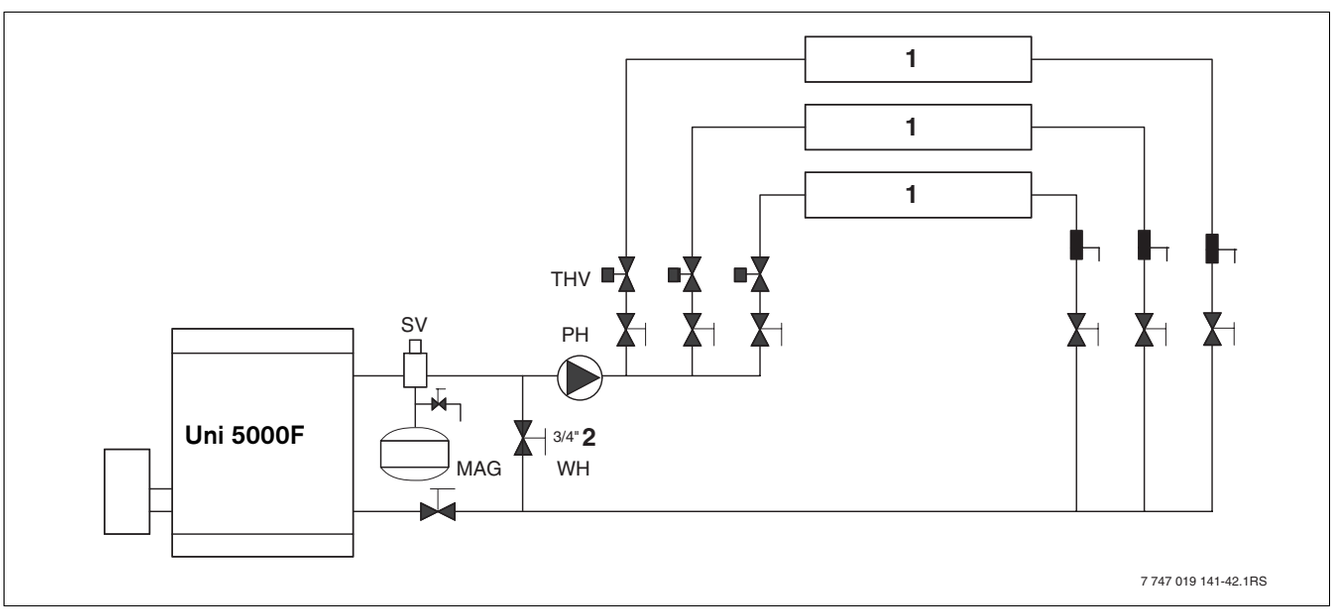

Fig. 68 Multiple circuits of water diversion for systems with a high water volume

1 Radiator
2 Boiler bypass

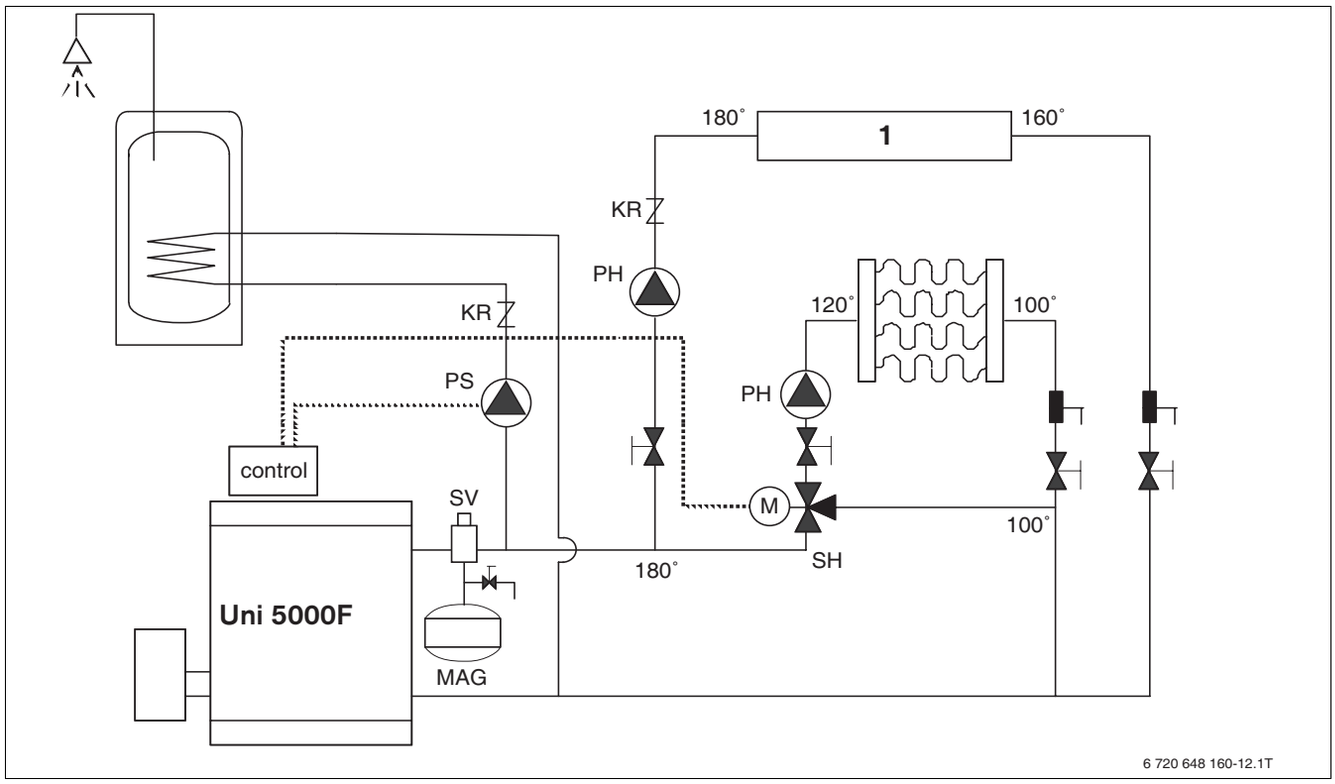

Fig. 69 Multiple circuits with pumps and motor-actuated 3-way mixing valve

1 Baseboard

12 Parts lists

The following parts are available from Bosch. If there are several Bosch article numbers for one item number, the numbers for the various models are listed in the relevant columns. Otherwise the table shows the number of components for each model.

Legend for tables 23 and 24:

x = no spare part

(x) = component of a set, only available with set

0 = no picture available

Boiler block and burner door (→ Fig. 70)

Item no.	Description	Part number		
		Uni 171 4 section	Uni 207 5 section	Uni 256 6 section
10	Boiler block assembled	05178462	05178464	05178466
10	Boiler block unassembled	05178472	05178474	05178476
Available single components of the replacement boiler block				
20	Front section complete Note: When ordering also order seal no. 63006140	87185722180		
Available front section components:				
30	Threaded stud DIN939 M12x35 5.6	03719184		
40	Blank Flange lack Mod11306470, Vierk 130	05428094		
50	Washer DIN125-A13-A3K	(x)		
60	Hexagon nut ISO4032-M12-8-A3K	(x)		
70	Flue Blocking plate	05626814		
80	Countersunk bolt DIN7991-M8x16-Ms	(x)		
90	Gasket D94x120x1,5 L150 10C Order for sealing the above flange when ordering a front section	63006140		
100	Plug G 1 1/2"	05317544		
110	Gasket D48x63x1,5mm C4400 Klinger Sil green	87185712590		
115	Conversion nipple Tg no.241 black.a.i 1 1/2"X3/4"	80677076		
120	Center section Uni 5000F	87185722190		
130	Boiler nippple 119/50 Gr.2 must be sealed with red lead putty (2045004)	7747024966		
140	Boiler nippple 48/50 Gr.0a must be sealed with red lead putty (2045004)	7747024962		
0	Red lead putty, 0.25 kg container for sealing the boiler nipple	8718571927		
0	Glue 181 370ml container for securing sealing rope KMV (T20)	87185760190		
Required sealing rope: 2680 mm / center section; 2340 mm / back section the section must be fitted with a new sealing rope at the join.				
150	Sealing rope D15x4300 KMV Pack A=2 rolls for sealing between boiler sections	7747013784		
150	Sealing rope D15x4300 KMV Pack B=3 rolls for sealing between boiler sections	7747013785		
160	Back section complete Uni 5000F	87185722200		
Available back section components				
170	Threaded stud DIN 939 M16x45 5.6	03719328		
180	Washer DIN 125-A17-A3K	3869840		
190	Hexagon nut ISO 4032-M16-8-A3K	82585200		
200	Threaded stud DIN 939 M10x40 5.6	03719128		

Table 23 Boiler block and burner door

Item no.	Description	Part number		
		Uni 171 4 section	Uni 207 5 section	Uni 256 6 section
210	Washer DIN 125-A1.5-A3K	7747022052		
220	Hexagon nut ISO 4032-M10-8-A3K	7747028583		
230	Tie-bar M10x445 compl. for 4 sections	05127966	–	–
230	Tie-bar M10x555 compl. for 5sections	–	05127970	–
230	Tie-bar M10x685 compl. for 6sections	–	–	05127974
240	Gasket D125x170x2 L200 10C	63006141		
250	Connection block lack "US"	63012796		
260	Sensor well	63032236		
270	Plug G 3/4	05317714		
290	Plug G 1	05317712		
300	Gasket D33x44x2mm	63005462		
310	Gasket for feed pipe	05452330		
Feed pipe				
320	Distribution tube	05436342	05436344	05436366
330	Hexagon bolt ISO4017-M8x16-Ms	5090124	5090124	5090124
Boiler block components				
Spare parts that are supplied with the spare boiler block				
350	Flue connection complete Available spare part:	05521234		
340	Sealing rope GP 8x545 mm	05830718		
360	Flue baffle Zug 2 Uni 5000F 4 units in the center and bottom horizontal hot gas flues	–	87185737390	–
370	Baffle plate Zug 3 left Uni 5000F in the center vertical hot gas flue	87185707890	–	–
380	Draft baffle plate 3 right Uni 5000F in the center vertical hot gas flue	87185707880	–	–
390	Hinge eyelet Uni 5000F	05327454		
400	Hexagon bolt ISO4017-M10x35-8.8	5090230		
410	Washer DIN125-A10.5-A3K	7747022052		
420	Hinge Uni 5000F	05327451		
430	Hexagon bolt DIN6921-M10x25-8.8-SW16-SV	87185755000		
440	Hexagon bolt DIN6921-M10x65-8.8 for sealing the burner door	(x)	(x)	(x)
450	Boiler feet M10x51 mm compl.	05236440		
460	Gasket for flue collar DN150 compl.	05354012		
470	Flue silencer DN150 compl. BL 690mm without condensate drain; higher sound absorption	05074544		
475	Flue silencer DN150 compl. BL 315mm with condensate drain; lower sound absorption	05074504		
Flue silencer components				
460	Gasket for flue collar DN150 compl.	05354012		
480	Gasket for flue collar DN150 compl. (step cuff)	05354142		
490	Sealing rope 10x2000GP Sealing rope 1200mm for burner door for boiler with third-party boiler	63020963		
500	Burner door compl. up to 72 kW, burner hole D 112mm	63015211		
500	Burner door compl. from 72 kW, burner hole D 130mm	63015212		

Table 23 Boiler block and burner door

Item no.	Description	Part number		
		Uni 171 4 section	Uni 207 5 section	Uni 256 6 section
510	Sealing rope 14x1855, GP		63025436	
	Gasket compound brown (cartridge 310ml) for gluing dealing rope without residue		63014361	
520	Burner door insulation compl. Uni 5000F		63002402	
Available spare parts:				
530	Burner door panel insulation Uni 5000F		63004464	
540	Insulation plate for burner door Uni 5000F		63004465	
550	Washer DIN9021-A6.4-A3K	(x)	5264166	(x)
560	Oval-headed srew ISO7045-M6x40-4.8-A3T for fastening with packaged insulation	(x)	(x)	(x)
570	Gasket D42x52x1.5mm		05752520	
580	Sight glass D49.5x5mm		7747021871	
590	Sight glass cover plate		63037570	
600	Countersunk screw ISO7046-M5x16-Ms	5555760	5555760	5555760
610	Pressure measuring port G1/8" (thread DIN288-1)		05481194	
	B-Kit Uni 5000F			
	Components:			
	Supply manifold Uni 5000F			
	Elbow 90° 3/4 I/A			
	Boiler drain valve 3/4			
	Relief valve 3/4Mx3/4F 30PSI			
	Pressure/temperature gauge 1/4 NPT			
	Conversion nipple 1"x3/4" NPT			
	Plug 1" NPT		63032224	
	Sensor sleeve PMW-3SEE (162mm)			
	Bolt set B-Kit Uni 5000F			
	Components:			
	Hexagon nut EN 1661 M8 8.8 A3K			
	Hexagon nut EN 1661 M10 8.8 A3K			
	Threaded stud DIN939 M8x30 5.6			
	Washer DIN125-A8.4-A3K			

Table 23 Boiler block and burner door

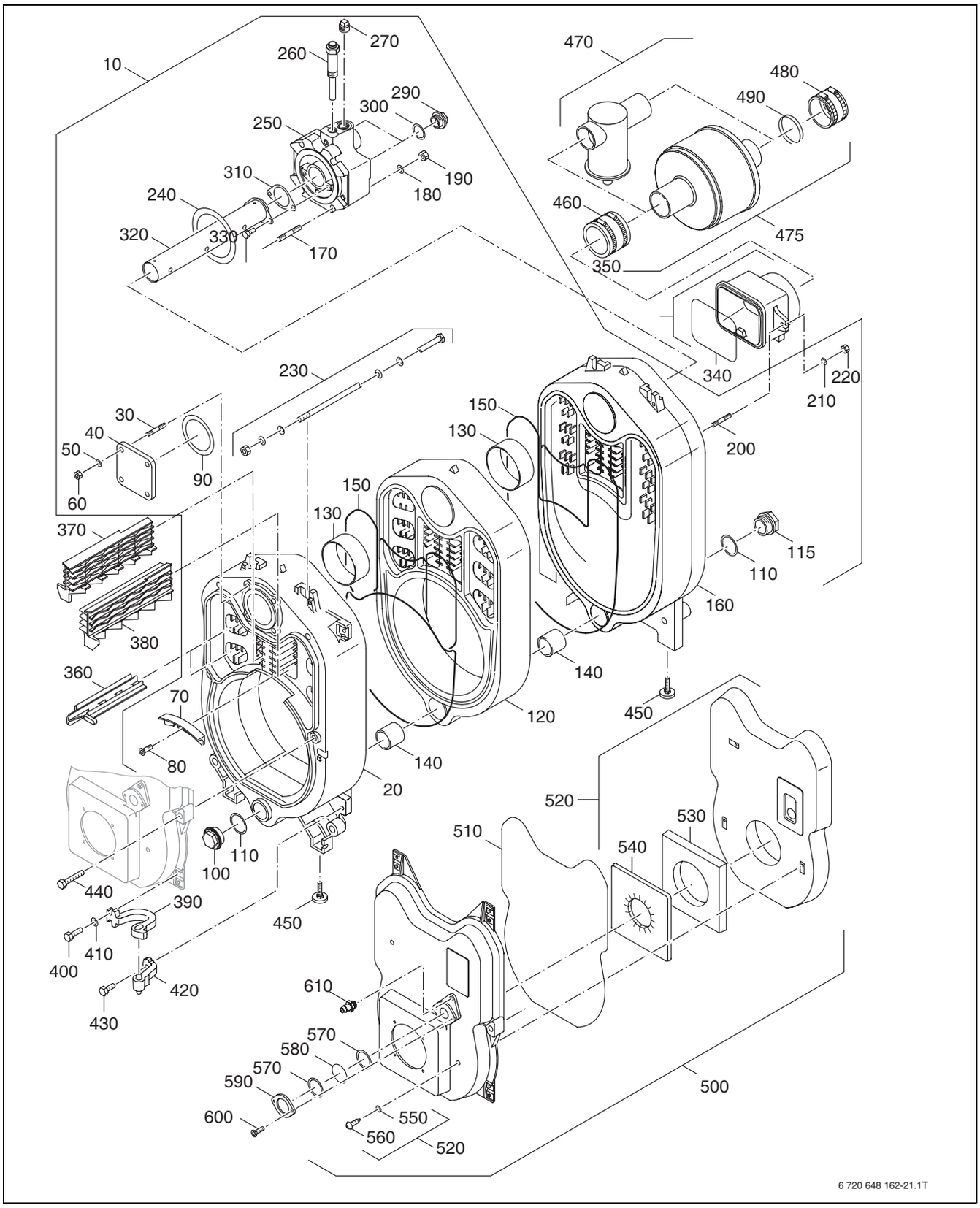

Fig. 70 Boiler block and burner door

Boiler jacket (→ Fig. 71)

Item no.	Description	Part number		
		Uni 171 4 section	Uni207 5 section	Uni 256 6 section
	The components of a complete jacket include: Bottom bar, top bar, 2 side panels, front cover, back cover, back panel, insulation cover for connection block, heat shield and mounting material. The following must be ordered separately: Front panel and burner cover, shield, insulation and burner line.			
10	Jacket compl.	8718582305	8718582307	8718582303
Available spare parts:				
20	Bottom bar		63039900	
30	Hexagon bolt DIN6921-M8x12-8.8	63036122	63036122	63036122
40	Top bar		63036481	
50	Side panel compl. 626 mm long	8718582326	–	–
50	Side panel compl. 746mm long	–	8718582323	–
50	Side panel compl. 866mm long	–	–	8718582329
60	Snap nut 4.2-A3K-SNO6930-angular.	(x)	(x)	(x)
70	Cover front compl.		8718582403	
75	Cover panel 300x160 cover front		8718582391	
80	Flathead bolt St3.9x9.5-A3T	5947756	5947756	5947756
90	Cover back compl. 347 mm long	8718582328	–	–
90	Cover back compl. 467 mm long	–	8718582325	–
90	Cover back compl. 587 mm long	–	–	8718582331
100	Back panel compl.		05261314	
110	Hexagon nut DIN6923-M10-8.8-A3K with locking teeth		87185712680	
120	Spacer bolt M8x63.5		00475485	
130	Hexagon nut DIN6923-M8-8.8-A3K with locking teeth		87185712670	
150	Cable clamp		07060754	
Mounting material for jacket			05621700	
	Contents: 5 flathead bolts ea. 3.9x9.5-A3T 2 hexagon bolts DIN6921-M8x12-8.8 1 cable clamp 2 snap nuts 4.2-A3K-SNO6930-angular 2 spacer bolts M8x63.5 4 hexagon nuts DIN6923-M10-8.8-A3K with locking teeth 2 hexagon nuts DIN6923-M8-A3K with locking teeth			
Articles that are not supplied with the jacket:				
190	Front panel compl. for boiler with third-party burner		8718582396	
200	Badge Bosch		8718582440	
Boiler block insulation in plastic bag				
220	Boiler block insulation	05261065	05261070	05261075
Available spare part:				
230	Retaining spring		7747016084	

Table 24 boiler jacket

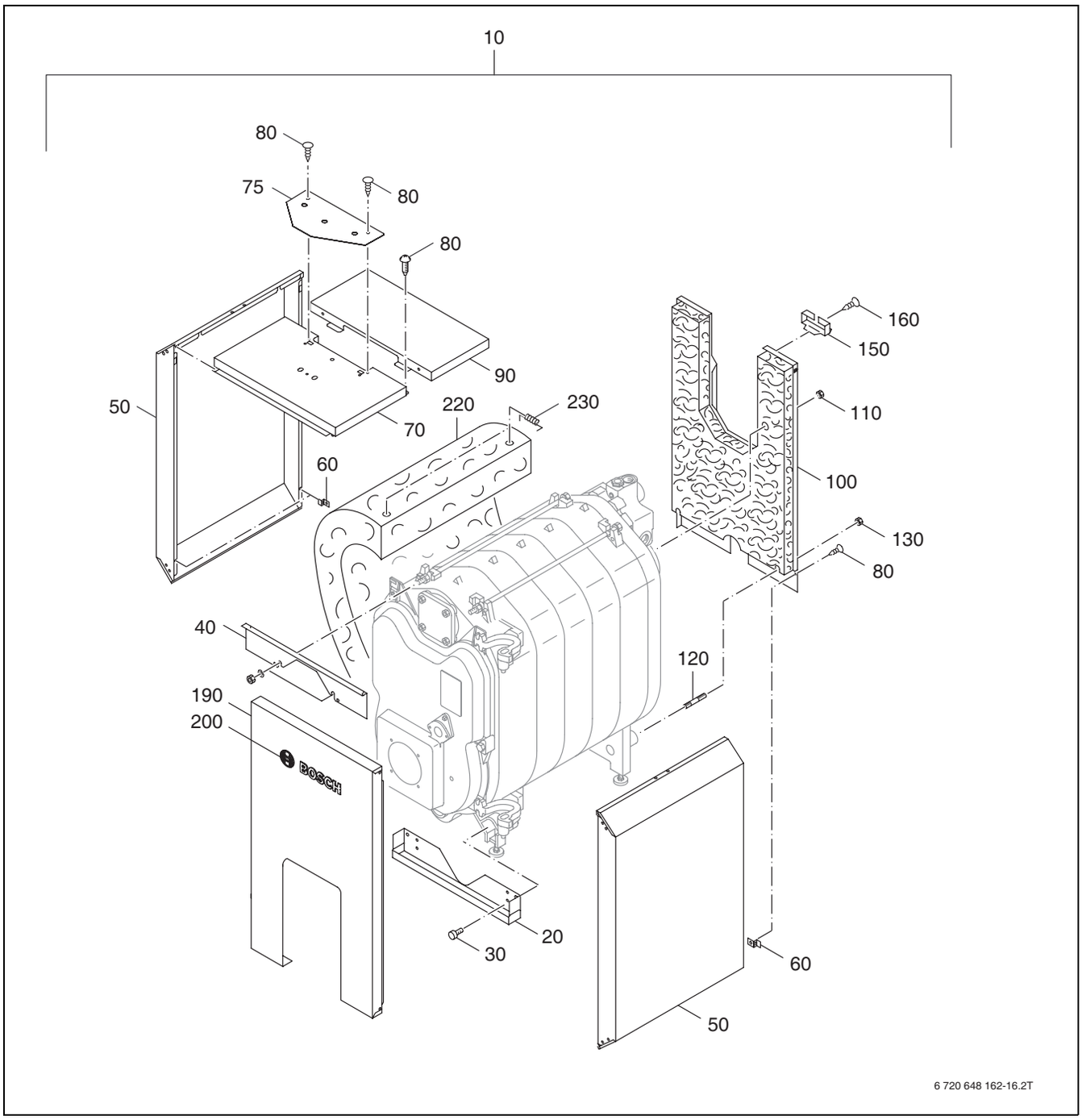

Fig. 71 boiler jacket Uni 5000F

13 Circuit diagrams

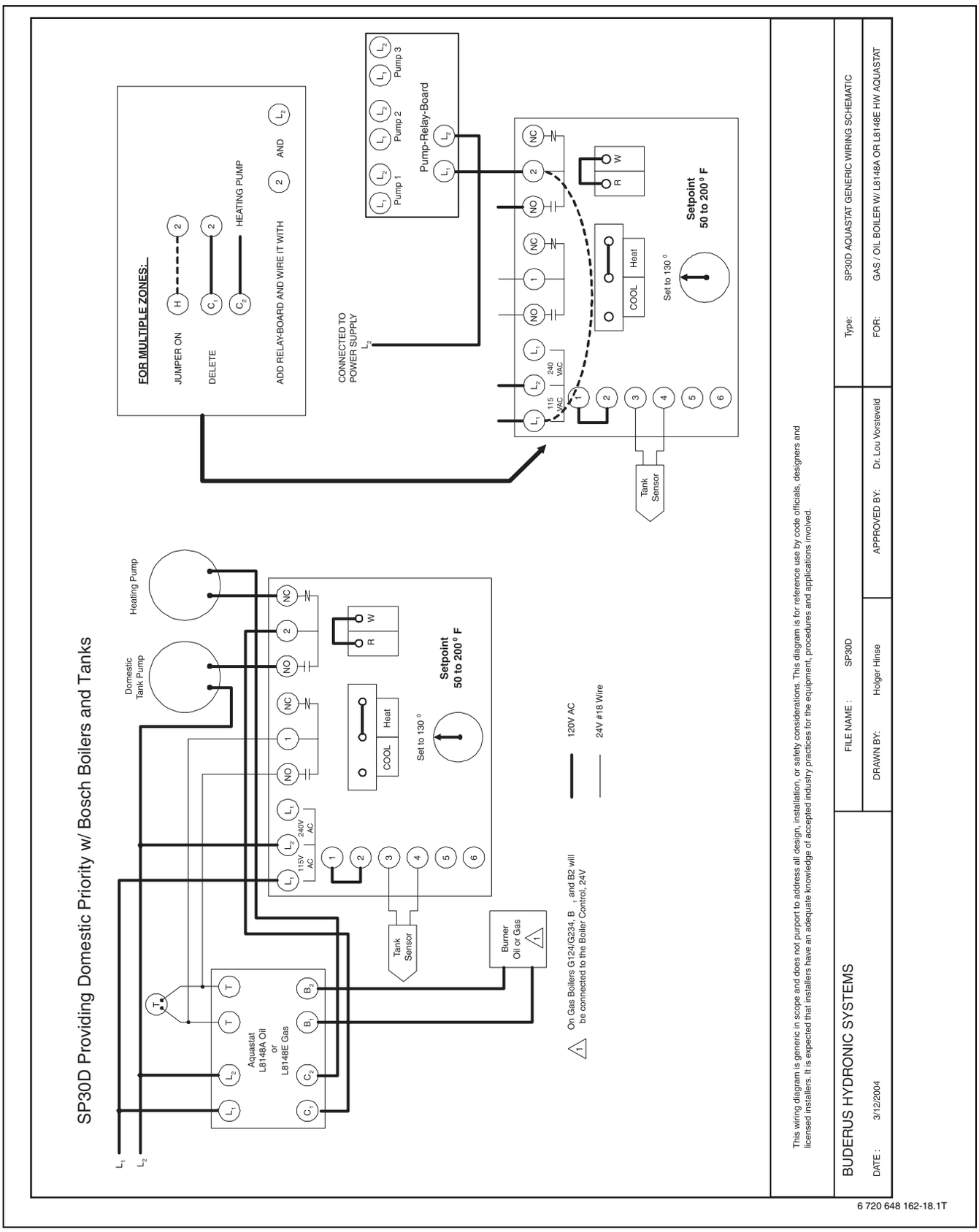

Fig. 72 Circuit diagram 1

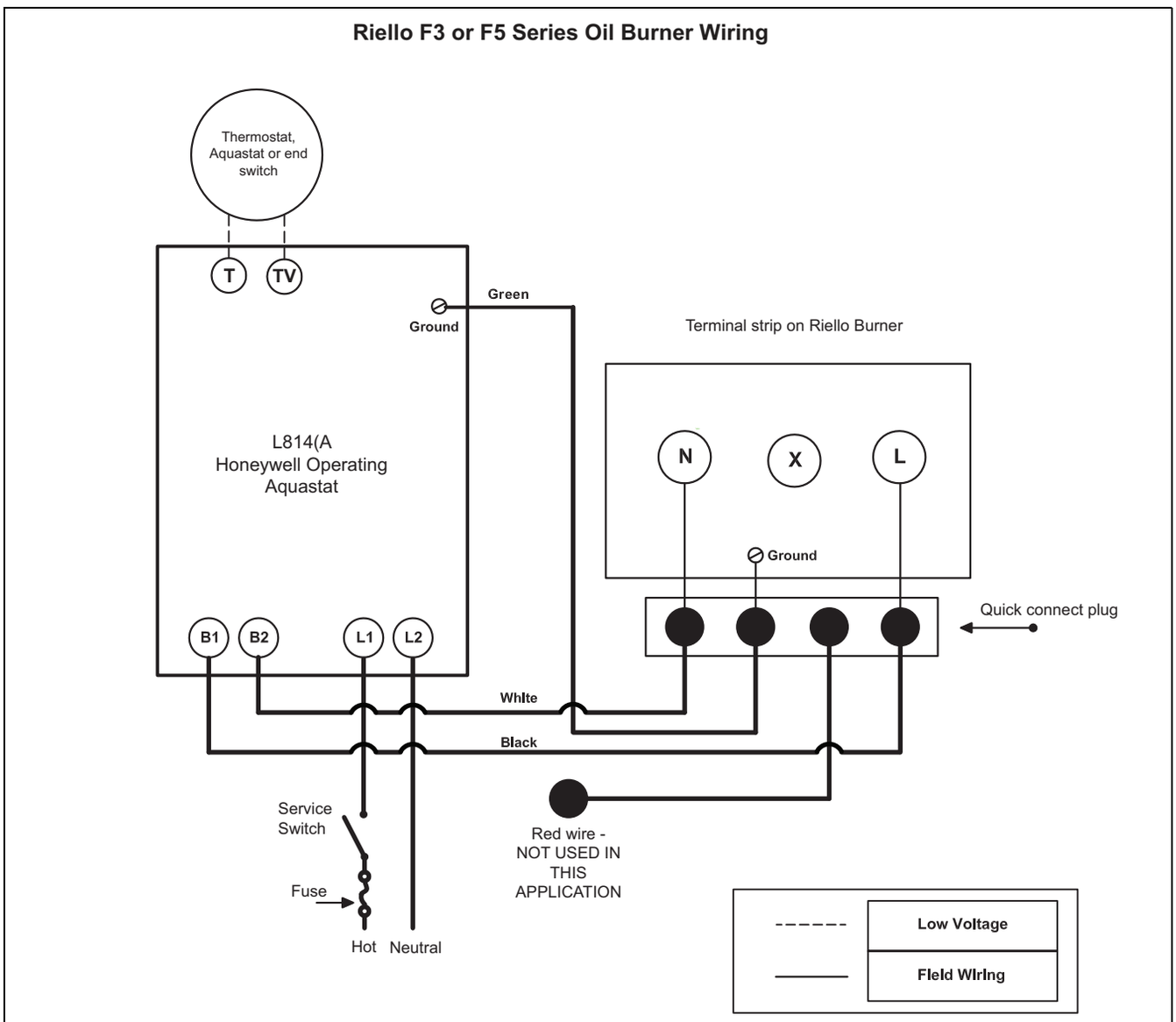

Riello F3 or F5 Series Oil fired Burner

Using a L8148A Aquastat -

1) Connect room thermostat or end switch wiring to the T & TV terminals of the L8148A Aquastat.
2) Connect incoming 120 Vac power source to L1 on the L8148A.
3) Connect a neutral to „L2“ on the L8148A.
4) Connect black wire to terminal B1 of the L8148A and to the „L“ terminal on the Riello Burner terminal block.
5) Connect black wire to terminal B2 of the L8148A and to the „N“ terminal on the Riello Burner terminal block.
6) Connect green wire to ground screw on L8148A and to ground connection on Riello Burner.
7) Red wire is not used in this application.

Note: This drawing is conceptual in nature and does nit purport to address all design, installation or safety considerations. Additional safety and/or auxiliary equipment may be needed. This diagram is for reference use by officials, designers and licensed installers. It is expected that installers have adequate knowledge of accepted industry practices for the equipment, procedures, and applications involved.

6 720 648 162-20.1T

Fig. 73 Circuit diagram 2

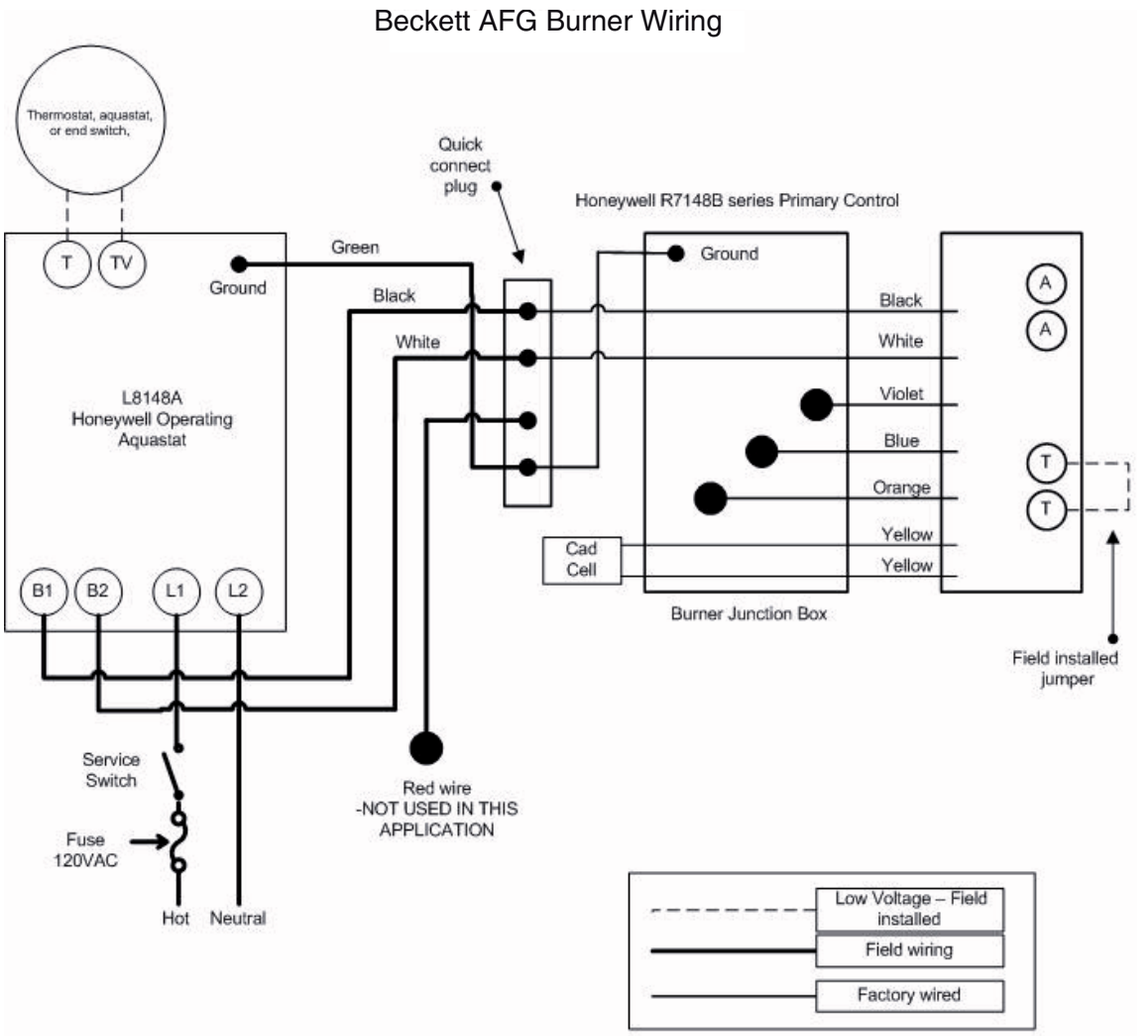

Beckett AFG Wiring Schematic -

Using a L8148A Aquastat –

1) Connect room thermostat or end switch wiring to the T & TV terminals of the L8148A Aquastat.
   Note: DO NOT CONNECT ROOM THERMOSTAT TO THE T – T TERMINALS OF THE HONEYWELL R7184 CONTROL!
2) Connect 120 Vac power source to L1 on the L8148A.
3) Connect neutral source to L2 on the L8148A aquastat.
4) Connect the black wire to B1 of the L8148A and to the black wire on the R7184B Control.
5) Connect the white wire to B2 of the L8148A and to the white wire on the R7184B Control.
6) Connect green wire to ground on L8148A and to the ground connection on the R7184B Control.
7) Install a jumper wire on the T T terminals of the R7184B Control.
8) Red wire is not used in this application.

Note: This drawing is conceptual in nature and does not purport to address all design, installation or safety considerations. Additional safety and/or auxiliary equipment may be needed. This diagram is for reference use by officials, designers and licensed installers. It is expected that installers have adequate knowledge of accepted industry practices for the equipment, procedures, and applications involved.

6 720 648 162-17.1T

Fig. 74 Circuit diagram 3

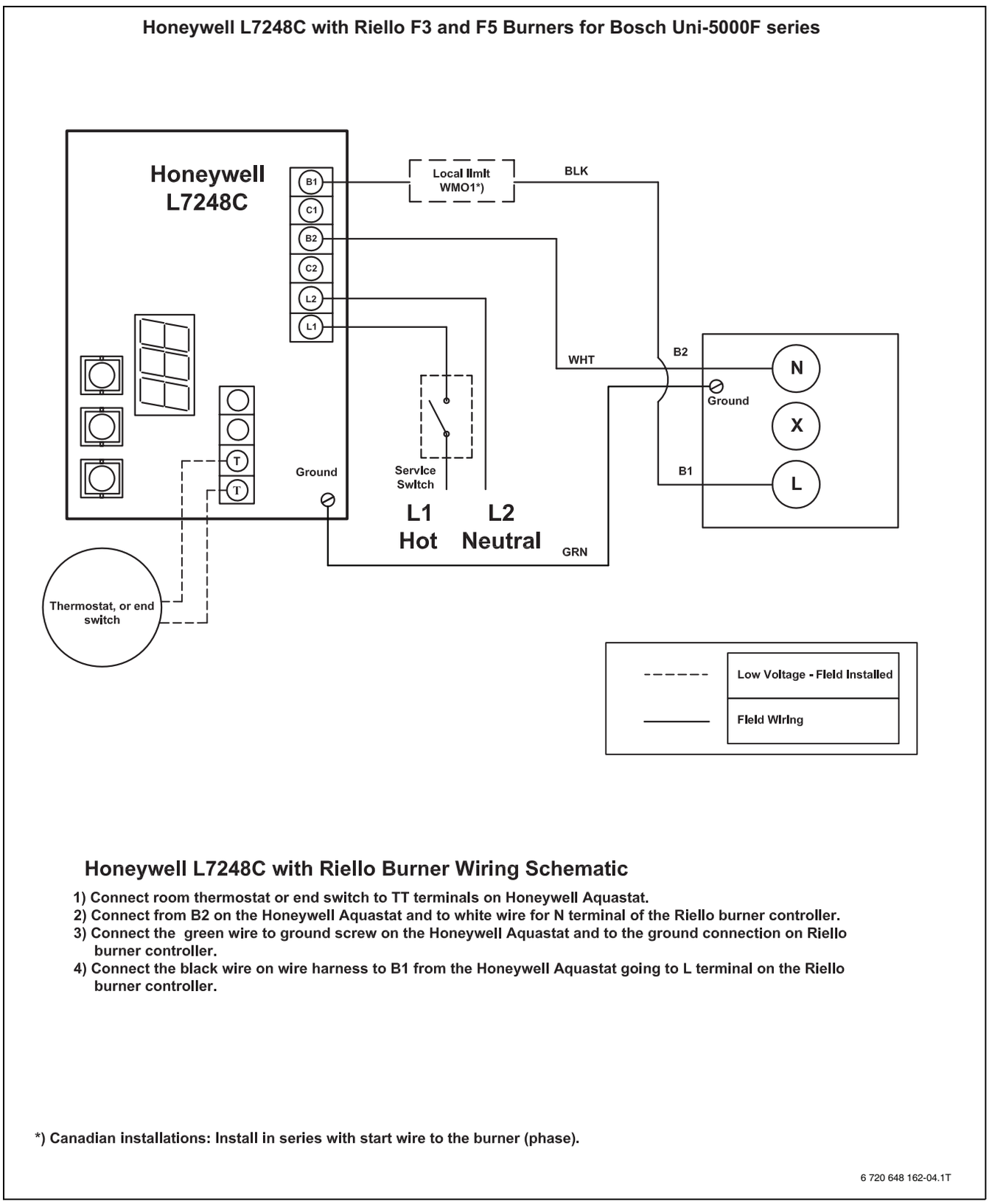

Fig. 75 Circuit diagram 4

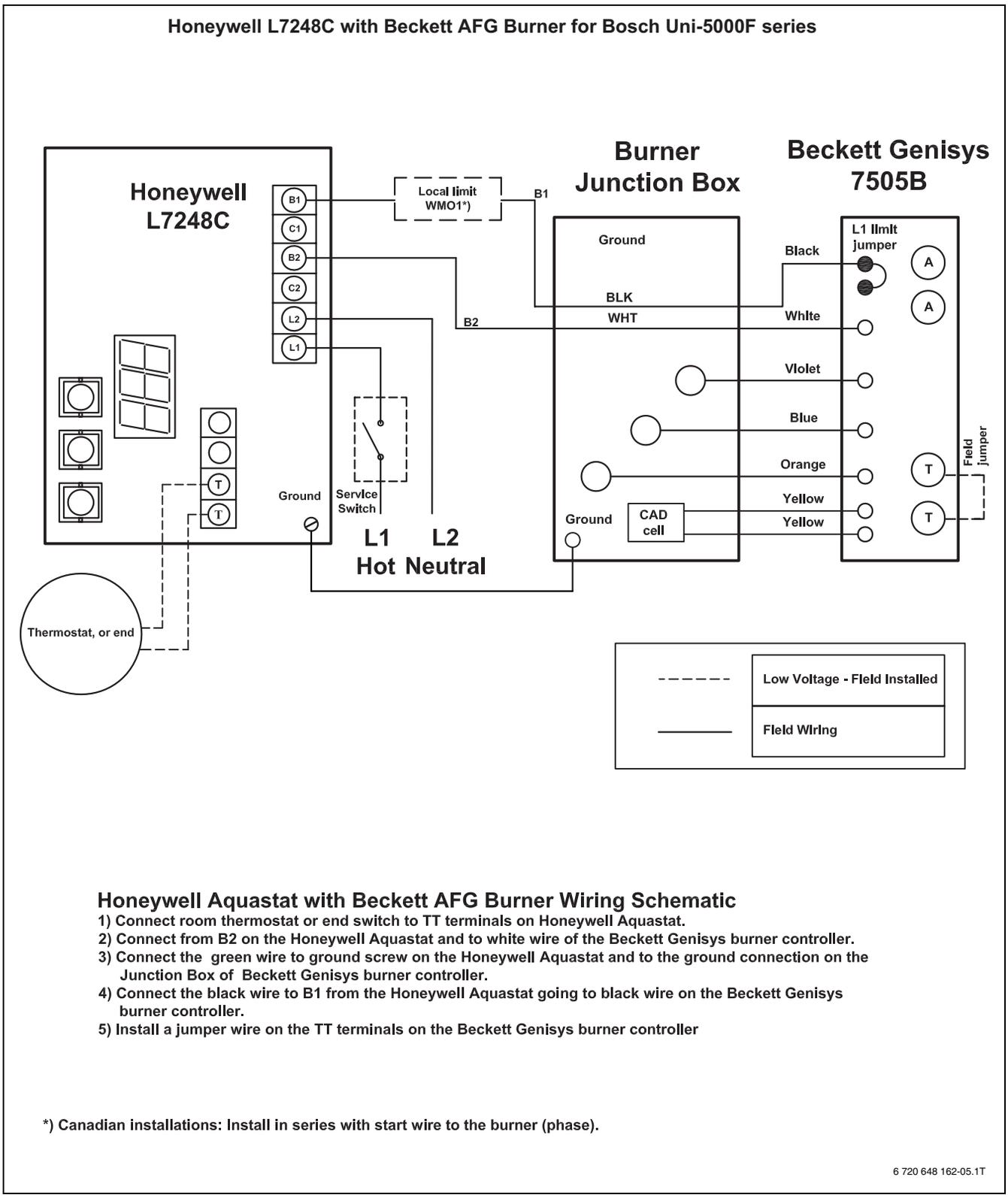

Fig. 76 Circuit diagram 5

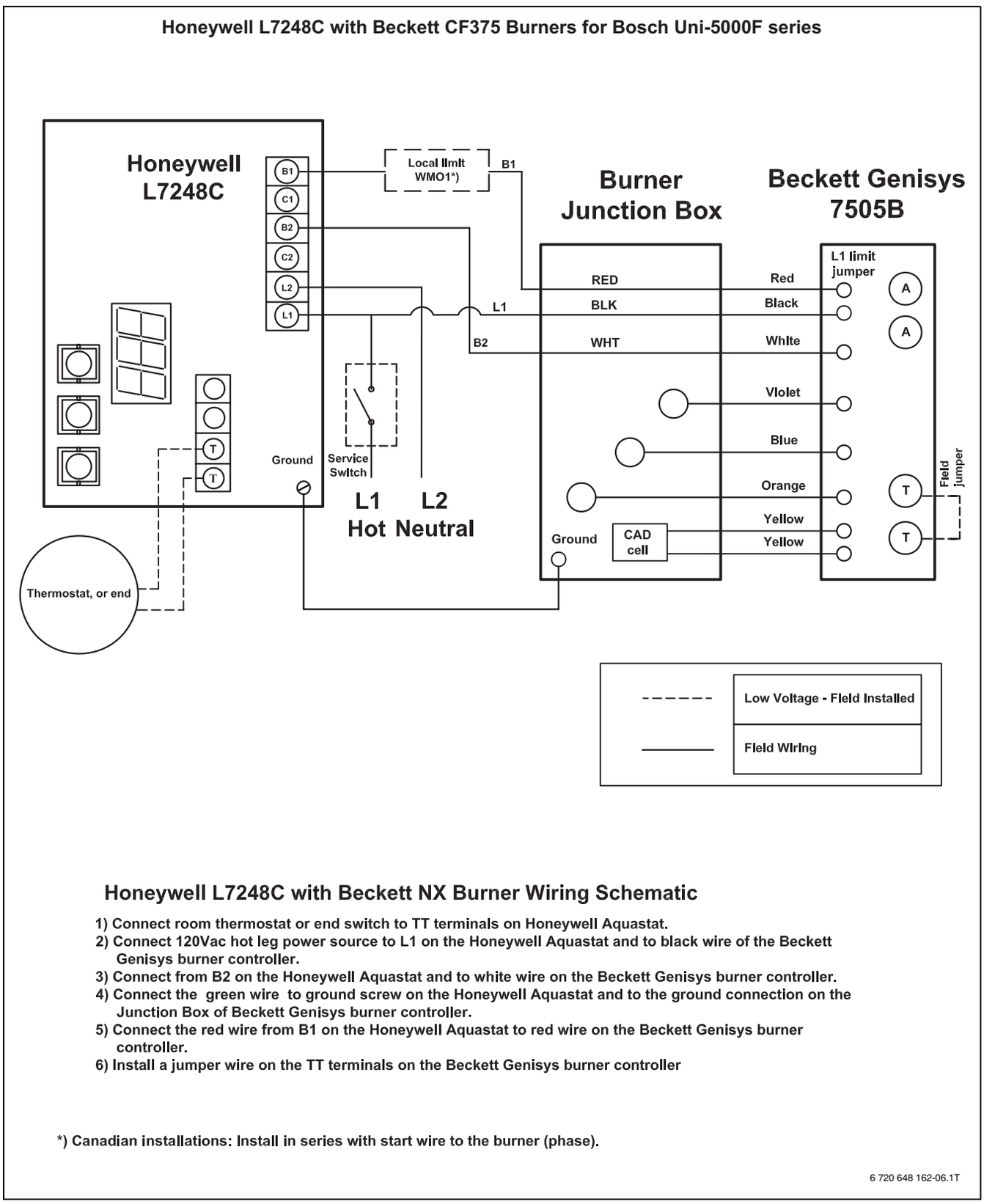

Honeywell L7248C with Beckett NX Burner Wiring Schematic

1) Connect room thermostat or end switch to TT terminals on Honeywell Aquastat.
2) Connect 120Vac hot leg power source to L1 on the Honeywell Aquastat and to black wire of the Beckett Genisys burner controller.
3) Connect from B2 on the Honeywell Aquastat and to white wire on the Beckett Genisys burner controller.
4) Connect the green wire to ground screw on the Honeywell Aquastat and to the ground connection on the Junction Box of Beckett Genisys burner controller.
5) Connect the red wire from B1 on the Honeywell Aquastat to red wire on the Beckett Genisys burner controller.
6) Install a jumper wire on the TT terminals on the Beckett Genisys burner controller

*) Canadian installations: Install in series with start wire to the burner (phase).

6 720 648 162-06.1T

Fig. 77 Circuit diagram 6

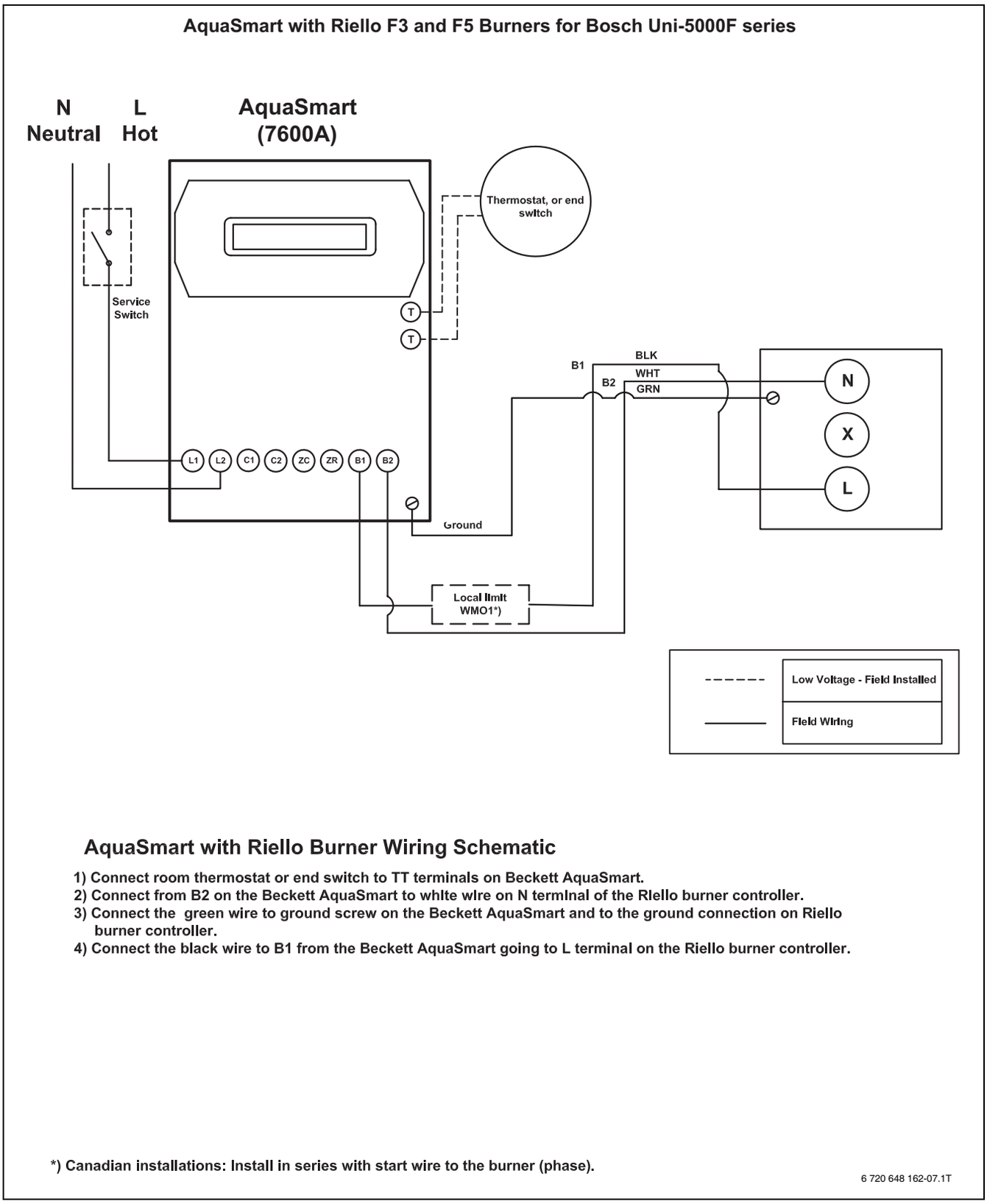

Fig. 78 Circuit diagram 7

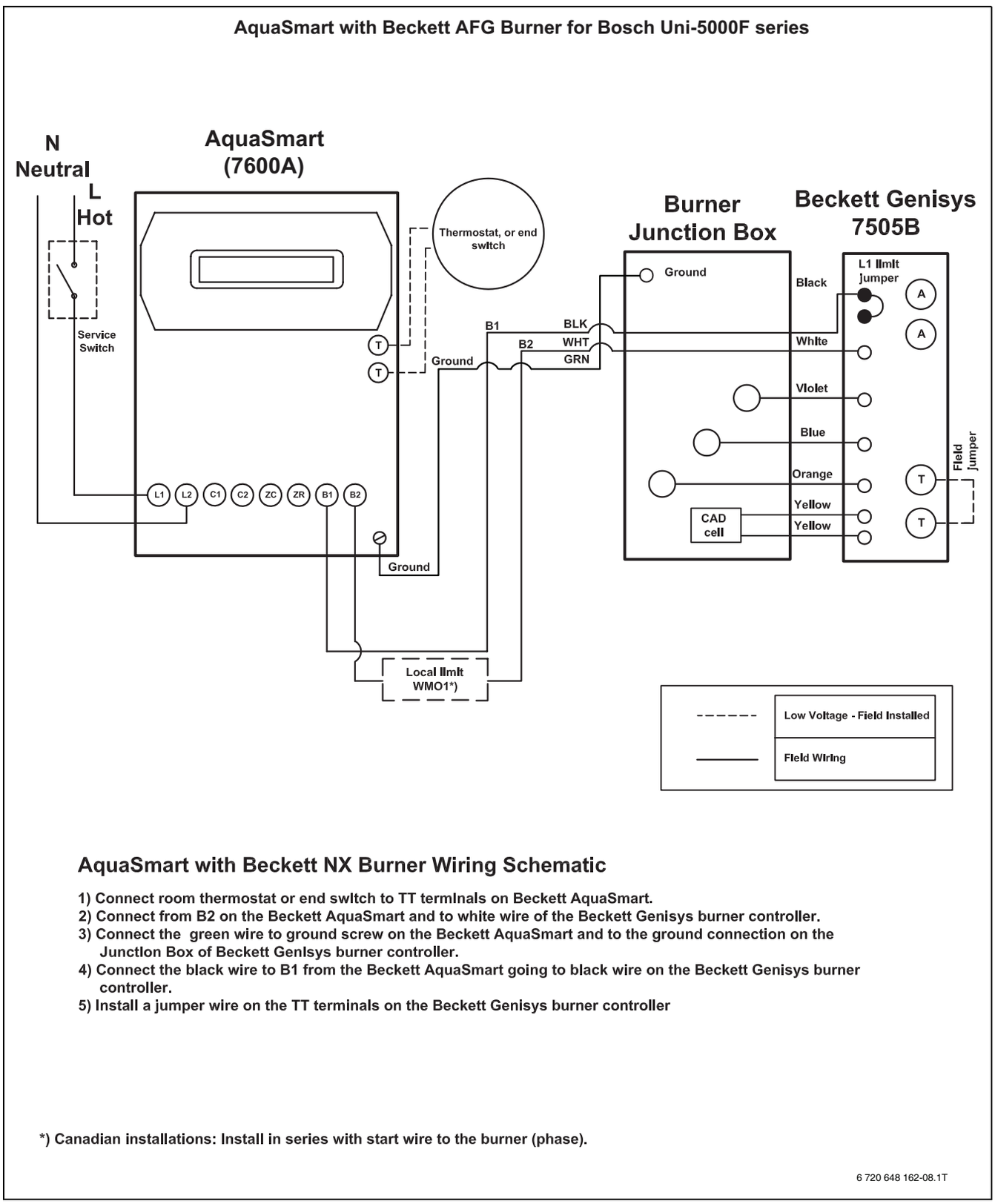

Fig. 79 Circuit diagram 8

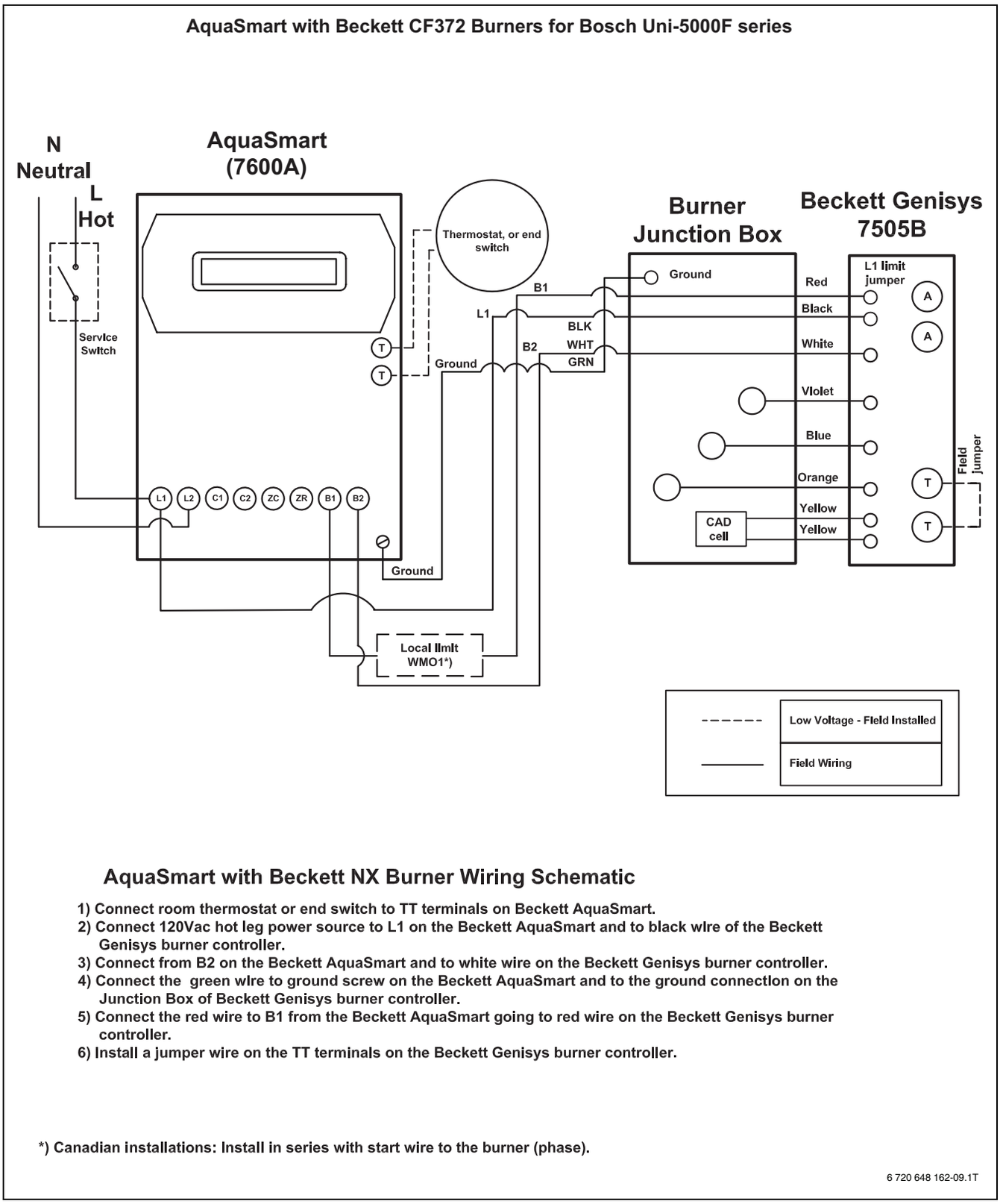

Fig. 80 Circuit diagram 9

Index

A
Aquastat ... 34

B
B-kit components ... 8
Boiler output ... 9
Boiler room ... 11
Boiler type ... 9
Burner, notes on commissioning ... 36

C
Checking for leaks (CH system) ... 32
Cleaning heat exchanger ... 41
Combustion air supply ... 12
Commissioning ... 36
  log ... 39
Connecting the fuel supply ... 34
Connections ... 9
Correcting burner faults ... 47

D
Dimensions ... 9
Dirt trap ... 31

E
Environment ... 11

F
Fitting B-kit ... 31
Fitting burner door panel ... 35
Fitting outer casing panels ... 35
Flow temperature ... 9
Fuel ... 12

H
Heating circuits, multiple ... 48
Heating emergency stop switch ... 40

I
Installation diagram ... 32
Installation examples ... 48
Installation of boiler drain ... 31

L
Log, commissioning ... 39
Logs, servicing and maintenance ... 44

M
Main isolating cock ... 36
Main isolating valve ... 36
Maintenance, regular ... 41
Master switch ... 40
Mounting the burner ... 33

O
On/Off switch ... 40
Onsite testing pressure ... 32
Operating Conditions ... 12
Operating conditions ... 10

P
Pack contents ... 8
Parts lists ... 51
Permissible operating pressure ... 9
Power supply voltagePower supply ... 13
Pressure testing nozzle ... 36
Pressure/temperature gauge ... 36, 42

R
Raising flue gas temperature ... 37
Rated heat output ... 9
Removing burner hood ... 34
Removing heat exchanger baffles ... 41
Replacing rope gasket ... 41

S
Safety ... 4
Safety valve ... 31–32, 36
Shutting down ... 40
Site test pressure ... 14
Specifications ... 9

T
Temperature/pressure gauge ... 36, 42
Topping up ... 42
Troubleshooting ... 47

W
Wall clearances ... 16
Water quality ... 14
Wet cleaning ... 42

Notes

United States and Canada

Bosch Thermotechnology Corp.
50 Wentworth Avenue
Londonderry, NH 03053
Tel. 603-552-1100
Fax 603-584-1681
www.bosch-climate.us
U.S.A.

Products manufactured by
Bosch Thermotechnik GmbH
Junkersstrasse 20-24
D-73249 Wernau
www.bosch-thermotechnology.com

Bosch Thermotechnology Corp. reserves the right to make changes without notice due to continuing engineering and technological advances.