Freeze Prevention Kit Installation Instructions

Freeze Prevention Kit

Accessory for models: GWH 425 HN, GWH 1600 H

Part no. 7 709 003 775

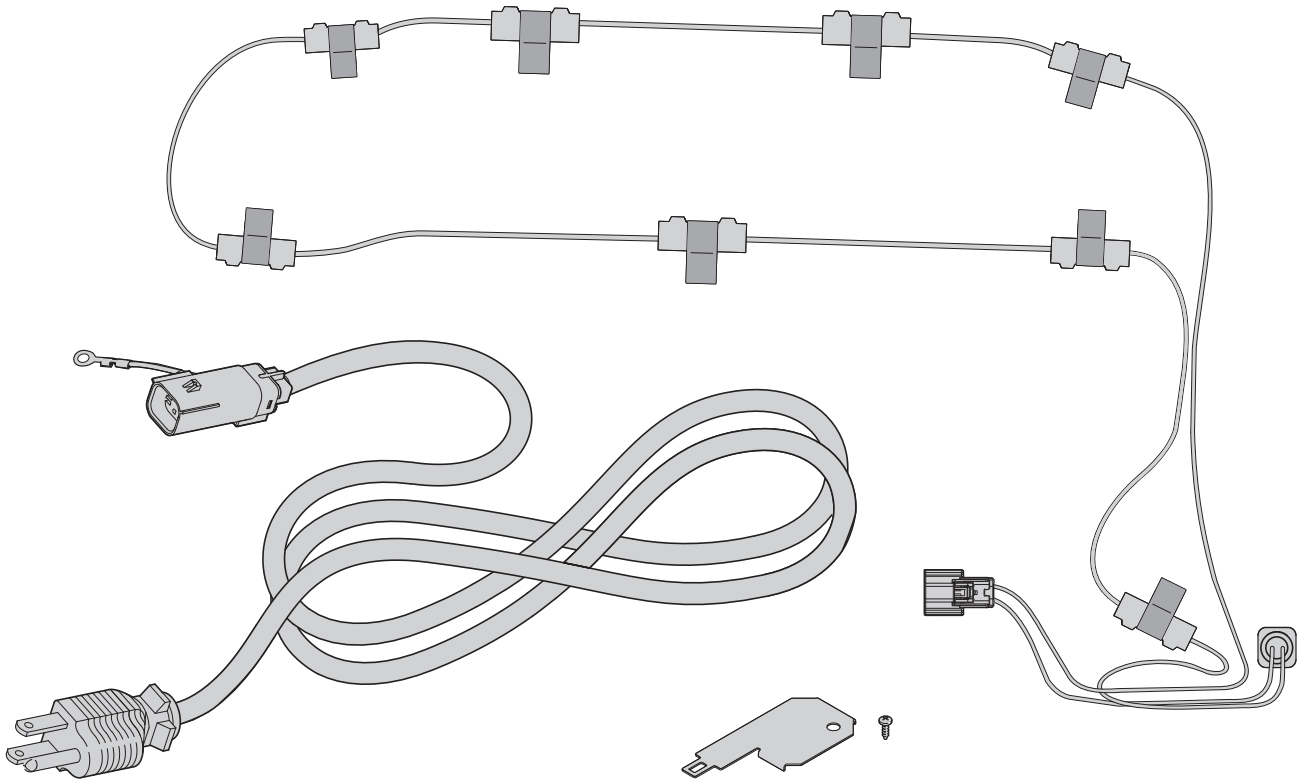

6720680499-00.1V

Warning: This kit must be installed by a qualified installer in accordance with these instructions and all applicable codes and requirements of the authorities having jurisdiction.

6 720 680 499 (2009/11) US

1 Installing freeze prevention kit

Preparation

Warning: For safety reasons, disconnect the power supply cord to the heater before any service or testing is performed.

Warning: This freeze prevention kit must be electrically grounded in accordance with the most recent edition of the National Electrical Code. NFPA 70. In Canada, all electrical wiring to the heater must be in accordance with local codes and the Canadian Electrical Code, CSA C22.1 Part 1. Do not rely on the gas or water piping to ground the metal parts of the heater.

Warning: The anti freeze kit is designed to provide protection for the water heater down to approximately 5°F for short term conditions only. It will not protect the appliance in areas where the temperature is routinely expected to be below freezing.

- ▸ The anti freeze kit will not protect plumbing outside the appliance from freezing. Precautions should be taken.
- ▸ Always drain the water heater if it will be exposed to long term freezing conditions. See Section 3.2 “Proper location for installing your heater” of the water heater installation manual.

The kit includes:

- Power supply cord 4.9ft (1.5m).
- Support with screw.
- Anti-freeze.

Remove front cover

- ▸ **1.** Remove the flow control and power adjustment knobs.
- ▸ **2.** Unscrew the cover fixing screws, see Fig. 1.
- ▸ **3.** Loosen the two Phillips head screws located on bottom rear of cover.
- ▸ **4.** Remove cover by pulling it outward and then lifting upwards.

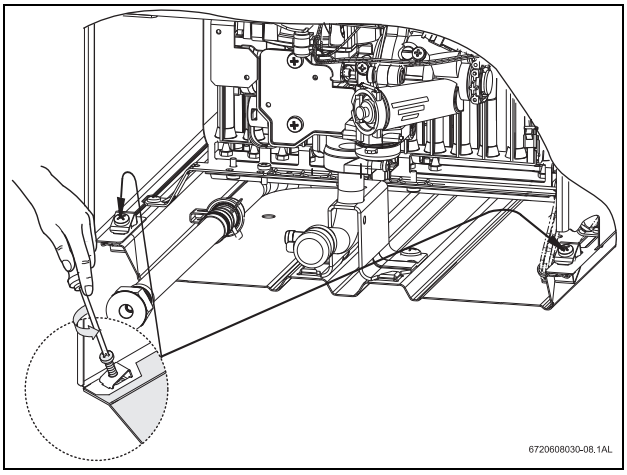

Fig. 1 Loosen two Phillips head screws

Installing freeze prevention kit

- ▸ **1.** Attach the support and earth wire to the appliance by fastening with the provided screw as shown in Fig. 2.

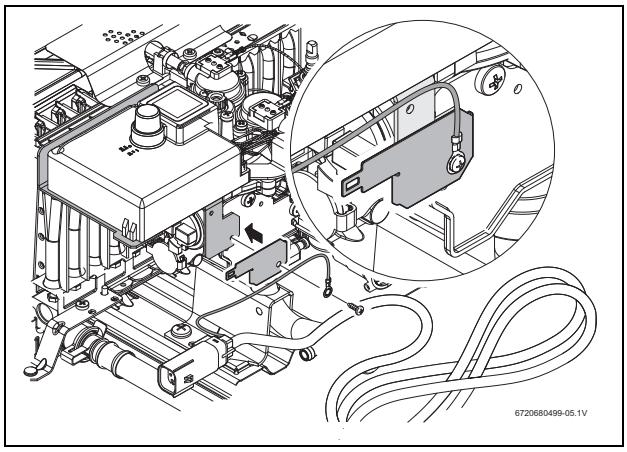

Fig. 2

- ▸ **2.** Attach the male connector to the support, as shown in Fig. 3.

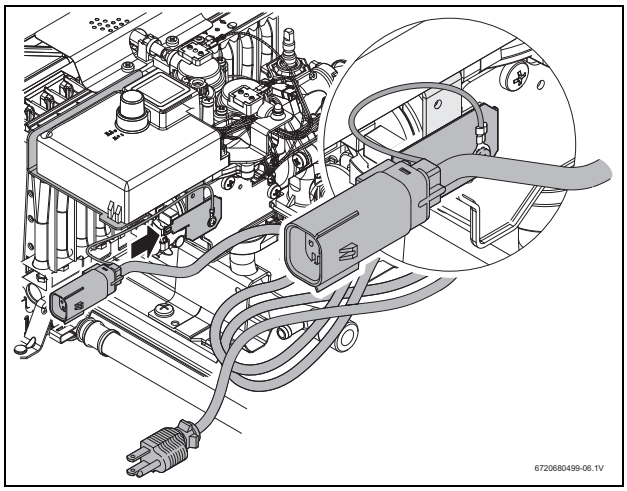

Fig. 3

▶ **3.** Place clip ceramic heating elements to heater as shown in Fig. 4, Fig. 5, and Fig. 6.

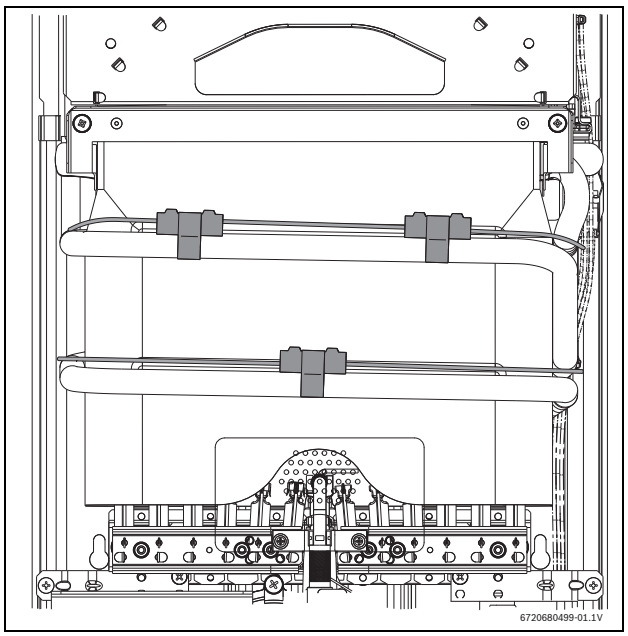

Fig. 4 Front view

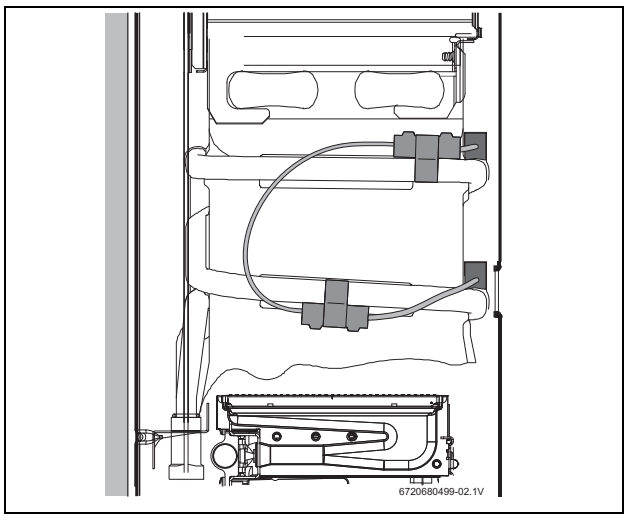

Fig. 5 Left side view

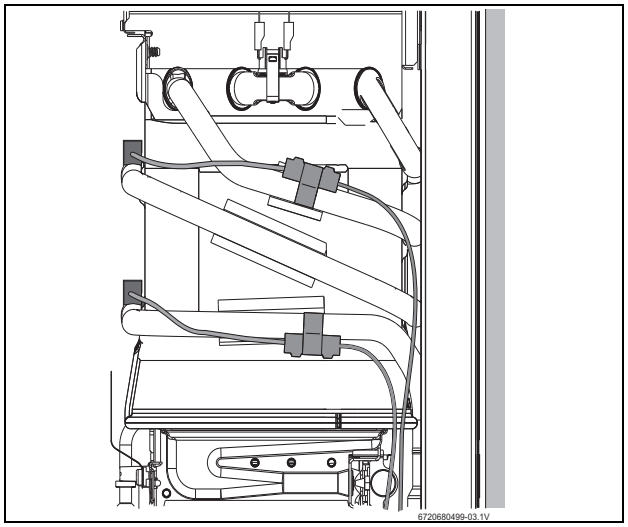

Fig. 6 Right side view

▶ **4.** Attach temperature sensor and clip ceramic to the cold water pipe as shown in Fig. 7.

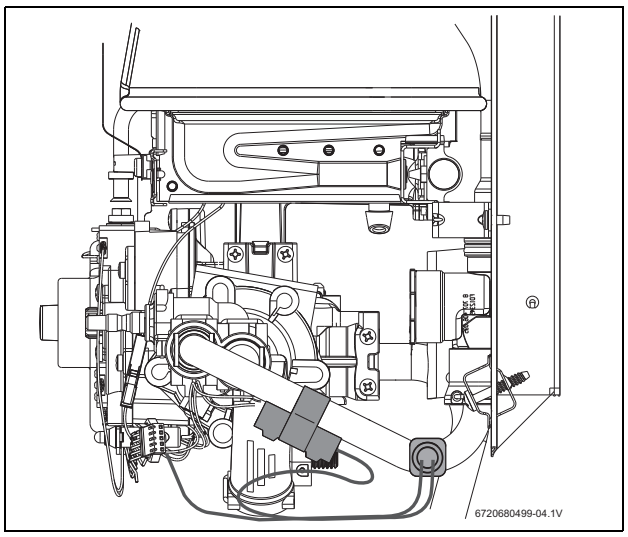

Fig. 7 Temperature sensor and clip ceramic

▶ **5.** Attach female connector from temperature sensor to male connector on heating circuit and lock the connector.

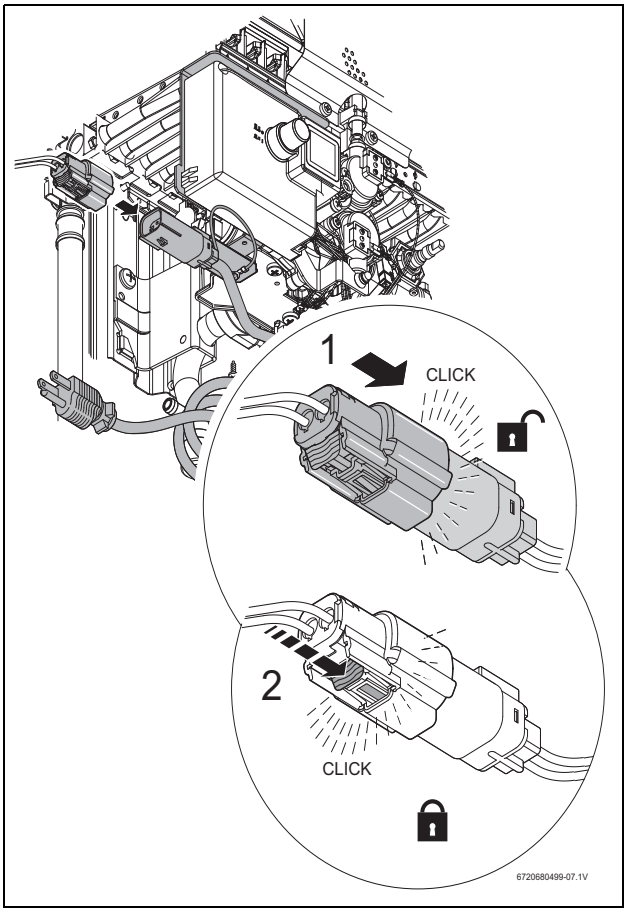

Fig. 8

▶ **6.** Connect the freeze prevention kit to the power supply.

Unplug the connector

▶ **1.** Unlock the connector.

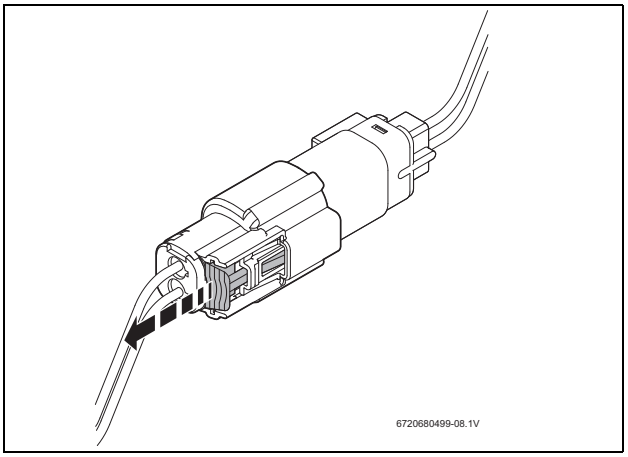

Fig. 9

▶ **2.** Detach the connector.

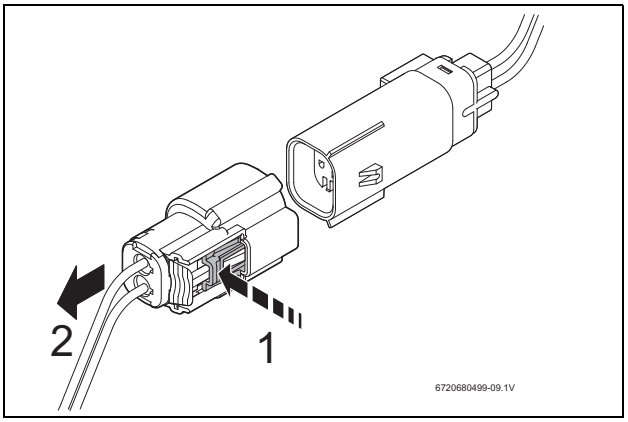

Fig. 10

Returning to Service

▶ **1.** Replace front cover and fasten the two Phillips head screws.

▶ **2.** Replace the flow control and power adjustment knobs and reconnect power supply.

Warning: Do not leave power connected to heater if heater is drained. Damage may occur to heating circuit.

Warning: In order for the freeze prevention kit to provide adequate protection,120V AC must always be supplied to the water heater.

Replacement Parts available from:

BOSCH THERMOTECHNOLOGY CORP.

50 Wentworth Avenue
Londonderry, NH 03053
Tel. 866-330-2730
www.boschpro.com

Bosch Termotecnologia SA
Estrada de Cacia
3801 - 856 Aveiro - PORTUGAL

Recycled paper

© 2009 Bosch Thermotechnology Corp., Londonderry, NH